BLIZZARD

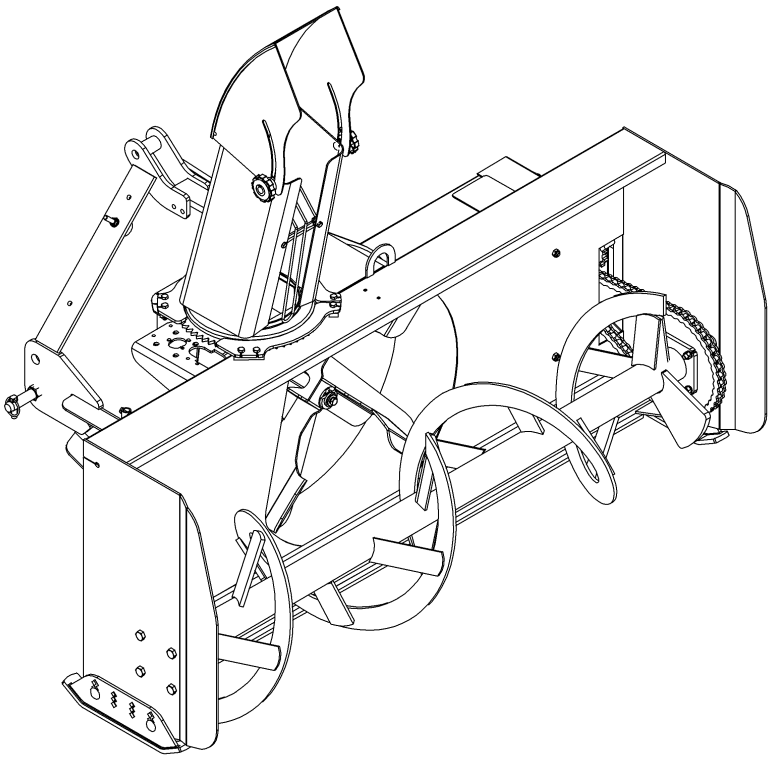

OPERATOR'S AND PARTS MANUAL

SNOWBLOWERS
BLIZZARD B48C, B54C & B64C MODELS

SERIAL NO. 21913360 AND UP

INTERTEK
ISO 9001:2000

OM 0409SB-A
Rev5 10-21

TABLE OF CONTENTS

SPECIFICATIONS....3
INTRODUCTION – TO THE PURCHASER....4
SAFETY PRECAUTIONS....5-6
General Information....5
Before Operation....5
Notice....6
The Snowblower....6-8
Before Operation....6
Snowblower Operation....7
Stay Clear of Rotating Drivelines....8
The Tractor....9
General Information....9
Operating the Tractor....9
During Operation....9
Roll-Over Protective Structure (ROPS)....10
Transport....10
Maintenance....11
Storage....11
SAFETY DECALS....12
ASSEMBLY....13-30
Tractor Preparation....13
Snowblower Assembly....13-30
Installation of the Chute....13
Installation of Snowblower with Three Point Hitch....14
Installation of Snowblower with Quick Hitch....15
Installation of the Manual Rotation....16-17
Installation of the Hydraulic Rotation....18-20
Installation of the Hydraulic Deflector....21-22
Installation of the Electric Deflector....23-25
How to Determine Driveline Angles....26
Angles at Each End of Driveline....26
Determining Driveline Length....27-28
Driveline Installation....29
Removing Snowblower from Tractor....30

TABLE OF CONTENTS

OPERATION 32-33
General Preparation 32
Operating Controls.....32
Work and Travel Speed 32
Raising and Lowering the Snowblower 32
Adjustments.....32
Chain Tension Adjustment.....32
Skid Shoe Adjustment 32
Manual Deflector Adjustment.....32
Snow Removal Methods.....33

MAINTENANCE 34-38
Maintenance 34
Shearbolts.....34
Drive shaft 34
Driveline 34
Lubrication.....35
Driveline – Troubleshooting.....36-38

PARTS.....39-53
Introduction.....39
Manual Holder 39
Snowblower – B48C 40-42
Snowblower – B54C & B64C.....43-45
Chute.....46
Gearboxes.....47-48
Driveline 4700100 for B48C.....49
Driveline 4700159 for B54C & B64C 50
BER007 – Manual Rotation 51
BER0078 – Hydraulic Rotation 52
BER0079A – Hydraulic Deflector.....53
BER0080 – Electric Deflector for B54C & B64C only 54
WARRANTY 55
TORQUE SPECIFICATION TABLE 56

SPECIFICATIONS

Features and Specifications	B48C	B54C	B64C
Working Width	48"	54"	64"
Transport Width	48"	54"	64"
Working Height	24 5/8"	26"	26"
Length	39"	41"	41"
Single/Dual Auger	Single	Single	Single
Auger Diameter	15"	15"	15"
Auger Flighting Thickness	1/4"	5/16"	5/16"
Impeller Diameter	20"	24"	24"
Impeller Width	6"	7"	7"
Impeller Shaft Diameter	1"	1 3/8"	1 3/8"
Number of Impeller blades	4	4	4
Roller Chain	50	60	60
Drive sprocket (# of teeth)	17	12	12
Driven sprocket (# of teeth)	36	38	38
Chain idler	Manual adjustment	Manual adjustment	Manual adjustment
Gearbox Manufacturer	Comer	Comer	Comer
Gearbox Description	L-25J Model	T-281A Model	T-281A Model
Tractor RPM	540	540	540
Impeller RPM	540	540	540
Auger RPM	170	170	170
PTO Manufacturer	Comer	Comer	Comer
PTO Description	20	40	40
Skid Shoe	Adjustable	Adjustable	Adjustable
Skid Shoe Material	Steel	Steel	Steel
End Plate Thickness	3/16"	3/16"	3/16"
Back Plate Thickness	12ga	12ga	12ga
Impeller Housing Thickness	12ga	12ga	12ga
Impeller Blade Thickness	3/16"	3/16"	3/16"
Cutting Edge	Welded	Welded	Welded
Cutting Edge Dimension	3/8" x 2"	3/8" x 2"	3/8" x 2"
Chute Base	Standard	Standard	Standard
Parking Stand	Standard	Standard	Standard
Hitch Category	Cat. 1	Cat. 1	Cat. 1
Quick Hitch Compatibility	ASABE Compatible	ASABE Compatible	ASABE Compatible
HP Requirements - min-max (hp)	16-35	16-35	20-50
Operating Weight (lbs)-hyd. rot. & defl.	437	455	479
Shipping Weight (lbs)	379	464	494
Approx. Set-up Time (min.)*	45	45	45
Chute Deflector Adjustment (standard)	Manual	Manual	Manual
Chute Deflector Adjustment (option)	**Hydraulic:** cylinder (2"x5"), brackets, support **Electric:** actuator 5" - 75 lb brackets, hardware, switch & wires included	**Hydraulic:** cylinder (2"x5"), brackets, support **Electric:** actuator 5" - 75 lb brackets, hardware, switch & wires included	**Hydraulic:** cylinder (2"x5"), brackets, support **Electric:** actuator 5" - 75 lb brackets, hardware, switch & wires included
Chute Rotation	**Manual:** worm gear w/ crank. **Hydraulic:** 50cc hyd.motor, flow restrictor.	**Manual:** worm gear w/ crank. **Hydraulic:** 50cc hyd.motor, flow restrictor.	**Manual:** worm gear w/ crank. **Hydraulic:** 50cc hyd.motor, flow restrictor
Chute	Two-part	Two-part	Two-part

* With manual chute rotation

INTRODUCTION

TO THE PURCHASER

All BER-VAC and BLIZZARD products are designed to give safe, dependable service if they are operated and maintained according to instructions. **Read and understand this manual before operation.**

This manual has been prepared to assist the owner and operators in the safe operation and suitable maintenance of the implements. The information was applicable to products at the time of manufacture and does not include modifications made afterwards.

Read and understand this operator's manual before attempting to put an implement into service. Familiarize yourself with the operating instructions and all the safety recommendations contained in this manual and those labeled on the implements and on the tractor. Follow the safety recommendations and make sure that those with whom you work follow them.

Illustrations

The illustrations may not necessarily reproduce the full detail and the exact shape of the parts or depict the actual models, but are intended for reference only

Direction Reference

Right Hand and Left Hand are determined by those seen by the conductor standing behind the equipment.

The Dealer is responsible for warranty registration of the unit you have purchased. To assist your dealer in handling your needs, please record hereafter the model number and serial number of your implement and tractor. It is also advisable to supply them to your insurance company. It will be helpful in the event that an implement or tractor is lost or stolen.

MODEL : _____

SERIAL NUMBER : _____

DATE OF PURCHASE : _____

SAFETY PRECAUTIONS

SAFETY FIRST

This symbol, the industry's "Safety Alert Symbol", is used throughout this manual and on labels on the machine itself to warn of the possibility of personal injury. Read these instructions carefully. It is essential that you read the instructions and safety regulations before you attempt to assemble or use this unit.

DANGER : Indicates an imminently hazardous situation which, if not avoided, will result in death or serious injury.

WARNING : Indicates a potentially hazardous situation which, if not avoided, could result in death or serious injury.

CAUTION : Indicates a potentially hazardous situation which, if not avoided, may result in minor or moderate injury.

IMPORTANT : Indicates that equipment or property damage could result if instructions are not followed.

NOTE : Gives helpful information.

All products are designed to give safe, dependable service if they are operated and maintained according to instructions. **Read and understand this manual before operation**. It is the owner's responsibility to be certain anyone operating this product reads this manual, and all other applicable manuals, to become familiar with this equipment and all safety precautions. Failure to do so could result in serious personal injury or equipment damage. If you have any questions, consult your dealer.

BEFORE OPERATION

Children and Bystanders

Tragic accidents can occur if the operator is not alert to the presence of children. Children are generally attracted to machines and the work being done. Never assume children will remain where you last saw them.

1. Keep children out of the operating area and under the watchful eye of another responsible adult.
2. Be alert and turn machine off if children enter the work area.
3. Before and when backing, look behind and look for small children.
4. Never carry children while operating the machine. They may fall off and be seriously injured or interfere with safe operation of the machine.
5. Never allow children to play on the machine or attachment even when turned off.
6. Never allow children to operate the machine even under adult supervision.
7. Use extra care when approaching blind corners, shrubs, trees, or other obstructions that might hide children from sight.

NOTICE

A safe operator is the best insurance against accidents. All operators, no matter how experienced they may be, should read this Operator's Manual and all other related manuals before attempting to operate an implement. Please read the following section and pay particular attention to all safety recommendations contained in this manual and those labeled on the implements and on the tractor.

THE SNOWBLOWER

Before Operation

1. Read and understand this operator's manual and tractor operator's manual. Know how to operate all controls and how to stop the unit and disengage the controls quickly.

2. Never wear loose, torn, or bulky clothing around the tractor and implement. It may catch on moving parts or controls, leading to the risk of accident.

3. Before the snow season, thoroughly inspect the area where the equipment is to be used and remove all doormats, sleds, boards and other foreign objects.

4. Disengage clutch and shift into neutral before starting the engine.

5. Do not operate equipment in wintertime without wearing adequate winter garments.

6. Never attempt to make any adjustments while engine is running. Read this manual carefully to acquaint yourself with the equipment as well as the tractor operator's manual. Working with unfamiliar equipment can lead to accidents. Be thoroughly familiar with the controls and proper use of the equipment. Know how to stop the unit and disengage the controls quickly.

7. Keep all shields in place and properly tighten all mounting hardware.

8. Periodically, inspect all moving parts for wear and replace with authorized service parts if an excessive amount of wear is present.

9. Replace all missing, illegible, or damaged safety and warning decals. See list of decals in the operator's manual.

10. Do not modify or alter this equipment or any of its components, or any equipment function without first consulting your dealer.

11. Keep safety decals clean of dirt and grime.

12. Make sure the tractor is counterweighted as recommended by your dealer. Weights provide the necessary balance to improve stability, traction and steering.

Snowblower Operation

1. Before leaving the tractor/snowblower unattended, take all possible precautions. Park the tractor/snowblower on level ground, place the transmission in neutral, set the parking brake, disengage the PTO, lower the snowblower to the ground, place all levers including auxiliary control levers in neutral, shut off the engine and remove the ignition key.

2. Before starting the tractor/ snowblower, remove the ice that might have accumulated on the auger/fan, inspect and clean every rotating part.

3. Prior to operation, clear work area of all objects that can be picked up and thrown. Mark all curbs, pipes, etc. that cannot be moved.

4. Be sure the PTO switch/lever is in OFF/disengaged position before starting engine.

5. Exercise extreme caution when operating on or crossing a gravel drive, walks, or roads. Stay alert for hidden hazards or traffic.

6. Do not carry passengers.

7. Keep clear of all rotating parts. Do not put hands or feet under, or into snowblower with engine running. Be especially observant of the snowblower areas of discharge, intake or all other mechanical motions.

8. For your safety, do not work under any hydraulically supported machine elements that may creep down, suddenly drop or be accidentally lowered.

9. Park the tractor/snowblower on level ground, place the transmission in neutral, set the parking brake, disengage the PTO, lower the snowblower to the ground, place all control levers in neutral, shut off the engine, remove the ignition key and allow the rotating parts to stop BEFORE unclogging the housing or the chute and making any repairs, adjustments or inspections. Use only a 36" long stick of wood to unclog the snowblower.

10. If the snowblower starts to vibrate abnormally, disengage the PTO, stop the engine immediately and check for cause. Excessive vibration is generally a sign of trouble.

11. Do not run the engine indoors except when starting engine and transporting attachment in or out of building. Carbon monoxide gas is colorless, odorless and deadly.

12. Do not attempt to operate on steep slopes. If operating on slopes is necessary, exercise extreme caution when changing direction.

13. Never operate snowblower without guards, and other safety protective devices in place. All tractor and snowblower shields and covers must be correctly installed at all times. When necessary to remove these, they must be reinstalled immediately.

14. Never operate snowblower near glass enclosures, automobiles, window wells, embankments, etc., without proper adjustment of snow discharge angle.

15. Never operate machine at high transport speeds on a slippery surface.

16. Use extra caution when backing up.

17. Disengage power to auger/fan when transporting or when not in use.

18. Never operate the snowblower without good visibility and lighting.

19. Prolonged exposure to loud noise can cause impairment or loss of hearing. Wear a suitable hearing protective device such as earmuffs or earplugs to protect against objectionable or uncomfortable noises.

20. Never allow anyone near the work area.

21. Never allow anyone to operate the snowblower until they have read the manual completely and are thoroughly familiar with basic tractor and snowblower operation.

22. Make sure the tractor is counterweighted as recommended by your dealer. Weights provide the necessary balance to improve stability, traction and steering.

23. Always make sure all snowblower components are properly installed and securely fastened BEFORE operation.

24. Adjust housing height to clear gravel or crushed rocks surface.

25. Keep away from chute discharge. This chute has the capacity to throw debris at far distances.

26. Never direct chute discharge towards people or animals. A thrown debris can cause serious injury.

Stay Clear of Rotating Drivelines

1. Entanglement in rotating driveline can cause serious injury or death.
2. Keep tractor master shield and driveline shields in place at all times. Make sure rotating shields turn freely.
3. Wear close fitting clothing. Stop the engine and be sure that PTO driveline is stopped before making adjustments, connections, or cleaning out PTO driven equipment.
4. Do not install any adapter device between the tractor and the primary implement PTO drive shaft that will allow a 1000 rpm tractor shaft to power a 540 rpm implement at speeds higher than 540 rpm.
5. Do not install any adapter device that results in a portion of the rotating implement shaft, tractor shaft, or the adapter to be unguarded. The tractor master shield shall overlap the end of the splined shaft and the added adaptor device as outlined in the table.

PTO Type	Diameter	Splines	n ± 5 mm (0.20 in.)
1	35 mm (1.378 in.)	6	85 mm (3.35 in.)
2	35 mm (1.378 in.)	21	85 mm (3.35 in.)
3	45 mm (1.772 in.)	20	100 mm (4.00 in.)

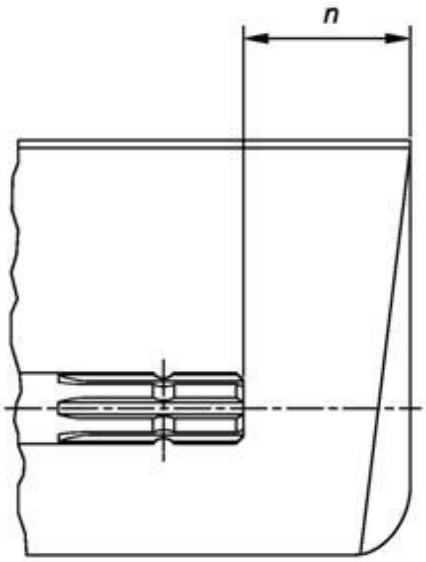

THE TRACTOR

General Information

1. Read the operator's manual carefully before using tractor. Lack of operating knowledge can lead to accidents.
2. Do not allow anyone but the operator to ride on the tractor. There is no safe place for extra riders

Operating the Tractor

1. Never run the tractor engine in a closed building without adequate ventilation, as the exhaust fumes are very dangerous.
2. Never allow an open flame near the fuel tank or battery.
3. Make sure the shield is installed when using a PTO-driven equipment and always replace the shield if damaged.
4. Always bring the tractor to a complete stop, shut off the engine, lower the implement to the ground and remove the ignition key before leaving the tractor.
5. Never park the tractor on a steep slope.
6. Do not attempt to operate on steep slopes.
7. Use of tire chains for better traction and stability is recommended.
8. Always drive the tractor at speeds compatible with safety, especially when operating over rough ground, crossing ditches, or when turning.
9. Handle fuel with care, as it is highly flammable.
10. Use approved fuel container.
11. Never add fuel to a running engine or a hot engine.
12. Fill fuel tank outdoors with extreme care. Never fill fuel tank indoors. Replace fuel cap securely and wipe up spilled fuel.
13. Never allow anyone to operate the snowblower until they are thoroughly familiar with basic tractor and snowblower operation.
14. A minimum 20% of tractor and equipment weight must be on the tractor front wheels when attachments are in transport position. Without this weight, tractor could tip over, causing personal injury or death. The weight may be attained with a loader, front wheel weights, ballast in tires or front tractor weights. Weigh the tractor and equipment. Do not estimate.
15. Always make sure all snowblower components are properly installed and securely fastened BEFORE operation.

During Operation

1. Do not allow anyone to ride on the tractor/snowblower at any time. There is no safe place for passengers on this equipment. The operator MUST sit in the tractor seat.
2. Eye and hearing protection is recommended when operating the snowblower.
3. Operate only during daylight hours, or when the area is well lit with bright artificial light.
4. Disengage the PTO (turn to “OFF”), place the transmission in neutral, set the parking brake, shut off the engine and remove the key, and make sure rotating components have stopped BEFORE leaving the operator’s seat.
5. Inspect the snowblower after striking any foreign object to assure that all snowblower parts are safe and secure and not damaged.

Roll-Over Protective Structure (ROPS)

1. DO NOT weld, drill or alter the ROPS. Damaged ROPS must not be straightened or used. If damage does occur, consult your dealer.
2. If the ROPS is lowered or removed from the tractor for any reason, it must be erected and/or refitted immediately. Original bolts or equivalent replacements must be used and tightened to the correct torque.
3. Your dealer does not recommend usage of tractor with ROPS removed.
4. If a fold-down ROPS is used, the ROPS can be folded down for storage, but it must be pinned in the upright position prior to operation.
5. Seat belt usage: With ROPS installed on the tractor it is imperative that the seat belt be installed, used and correctly adjusted, at all times. DO NOT use a seat belt if operating without ROPS.

Additional Safety Equipment

Keep a fire extinguisher and a first aid kit within reach.

TRANSPORT

1. If the tractor/snowblower is to be driven on public roads, it must be equipped with an SMV (Slow Moving Vehicle) sign. Check local traffic codes that may apply to unit usage on public roads and highways in your area.
2. Be alert for all other traffic when driving the tractor/snowblower on public roads or highways.
3. Always disengage the snowblower before transport.

MAINTENANCE

ALWAYS USE GENUINE PARTS WHEN REPLACEMENT PARTS ARE REQUIRED

1. Keep the tractor and snowblower properly maintained.
2. Park the tractor/snowblower on level ground, place the transmission in neutral, set the parking brake, disengage the PTO, lower the snowblower to the ground, place all control levers in neutral, shut off the engine and remove the ignition key and allow the rotating parts to stop BEFORE making any snowblower adjustments.
3. To avoid injury, do not adjust, unblock the driving system, or service the snowblower with the tractor engine running. Make sure rotating components have completely stopped BEFORE leaving the operator's seat.
4. Keep the tractor/snowblower clean. Snow, dirt or ice build-up can lead to malfunction or personal injury from thawing and refreezing in garage.
5. Always wear eye protection when cleaning or servicing the snowblower.
6. DO NOT service the tractor while the engine is running or hot, or if the unit is in motion. Always lower snowblower to the ground. If necessary to service snowblower in raised position, securely support with stands or suitable blocking before working underneath. Do not rely on hydraulically supported devices for your safety. They can settle suddenly, leak down, or be accidentally lowered.
7. Do not attempt to service machine, clear obstructions or unclog the snowblower with the engine running. Always shut off engine and allow all motion to cease.
8. The manufacturer will not claim responsibility for fitment of unapproved parts and/or accessories and any damages as a result of their use.
9. Make sure all shields and guards are securely in place following all service, cleaning, or repair work.

10. Do not modify or alter this snowblower or any of its components or operating functions. If you have questions concerning modifications, consult with your dealer.

11. Do not operate a snowblower that is defective or has missing parts. Make sure that all recommended maintenance procedures are completed before operating the snowblower.

12. Check all controls regularly and adjust where necessary. Make sure that the brakes are evenly adjusted.

13. Periodically check all nuts and bolts for tightness, especially wheel hub and rim nuts.

14. To avoid serious personal injury: Escaping hydraulic/diesel fluid under pressure can penetrate the skin causing serious injury. Do not use your hands to check for leaks. Use a piece of cardboard or paper to search for leaks. If you are injured by escaping high pressure fluid, see a medical doctor at once.

15. Stop engine and relieve pressure before connecting or disconnecting hydraulic hoses. Tighten all connections before starting engine or pressurizing hoses.

STORAGE

16. Before storing the snowblower, certain pre-cautions should be taken to protect it from deterioration.

17. Clean the snowblower thoroughly.

18. Make all the necessary repairs.

19. Replace all Safety Signs that are damaged, lost, or otherwise become illegible. If a part to be replaced has a sign on it, obtain a new safety sign from your dealer and install it in the same place as on the removed part.

20. Repaint all parts from which paint has worn or peeled.

21. Lubricate the snowblower as instructed under "Lubrication" section.

22. When the snowblower is dry, oil all moving parts. Apply oil liberally to all surfaces to protect against rust.

23. Attach driveline shield safety chain around driveline by passing it over the upper hitch.

24. Store in a dry place.

SAFETY DECALS

Replace Immediately if damaged

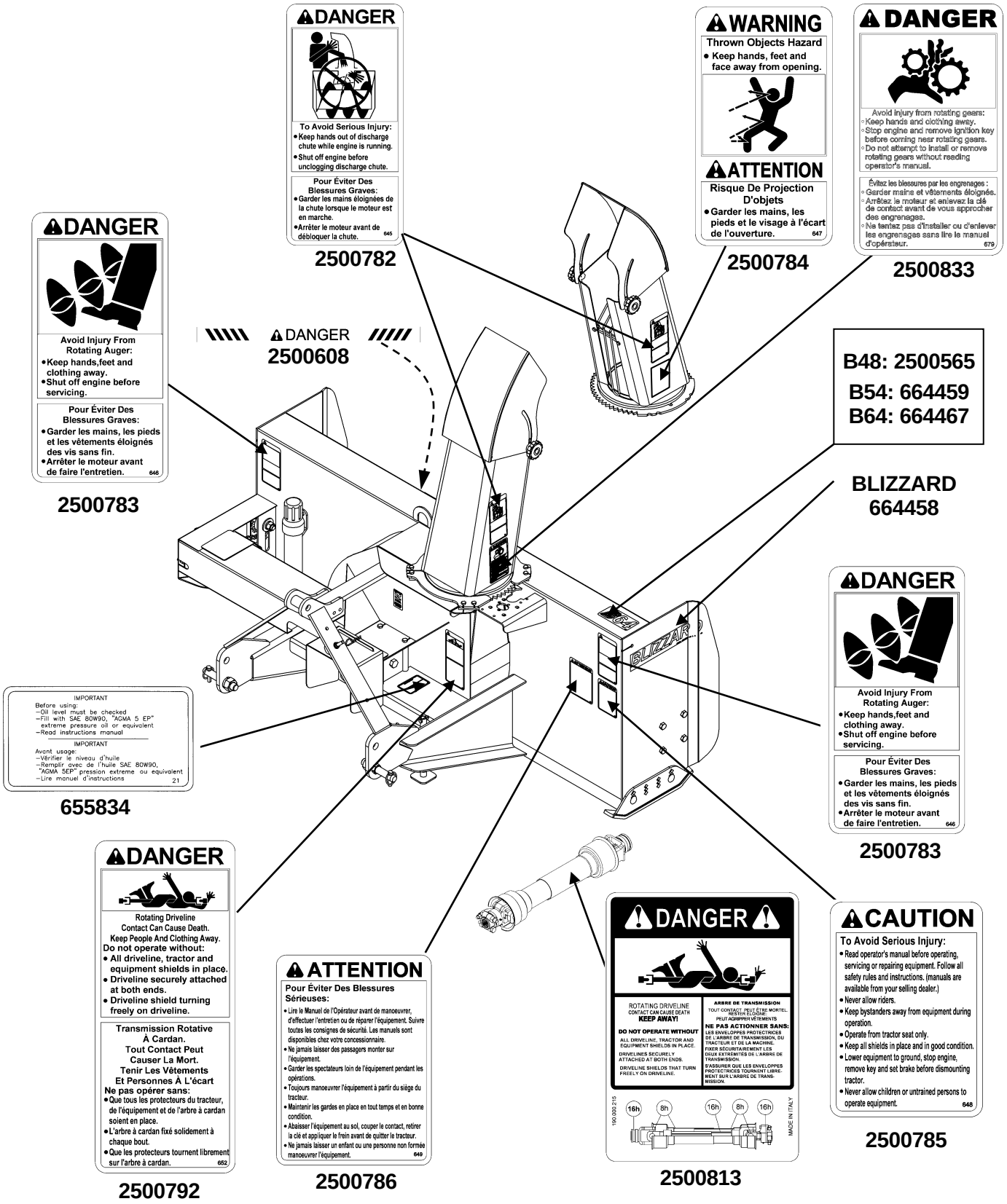

ASSEMBLY

TRACTOR PREPARATION

See Dealer for Tractor Preparation information.

SNOWBLOWER ASSEMBLY

The snowblower is assembled at the factory except for the parts in the hardware bag provided with the snowblower, the chute and the options if appropriate. Use the present manual and lay out all parts for assembly. Separate bolts and nuts into various sizes. After assembly, torque all the bolts according to the ***Torque Specification Table*** at the end of manual.

Installation of the Chute

(Figure 1)

1. **Figure 1:** Place the rotation bushing (item 1) on the chute base of the snowblower (item 4).
2. **Figure 1:** Install the chute (item 2) over the rotation bushing and install the the four 3/8" spacers (item 3) on the chute base (item 4). If using a BER0077 manual rotation, it is recommended to install the four 1/16" thick spacers (item 3A) between the snowblower housing and the 3/8" thick spacers (item 3), to facilitate the chute rotation.
3. **Figure 1:** Insert two 3-holes retaining plates (items 5) by placing the large section toward the rotation plate and put the 2-holes retaining plate (item 6) following the others. Secure with eight 5/16" x 1 1/4" bolts, eight 5/16" lockwashers and eight 5/16" hex nuts (items 7-8-9).
4. Tighten all bolts according to the ***Torque Specification Table*** at the end of manual.

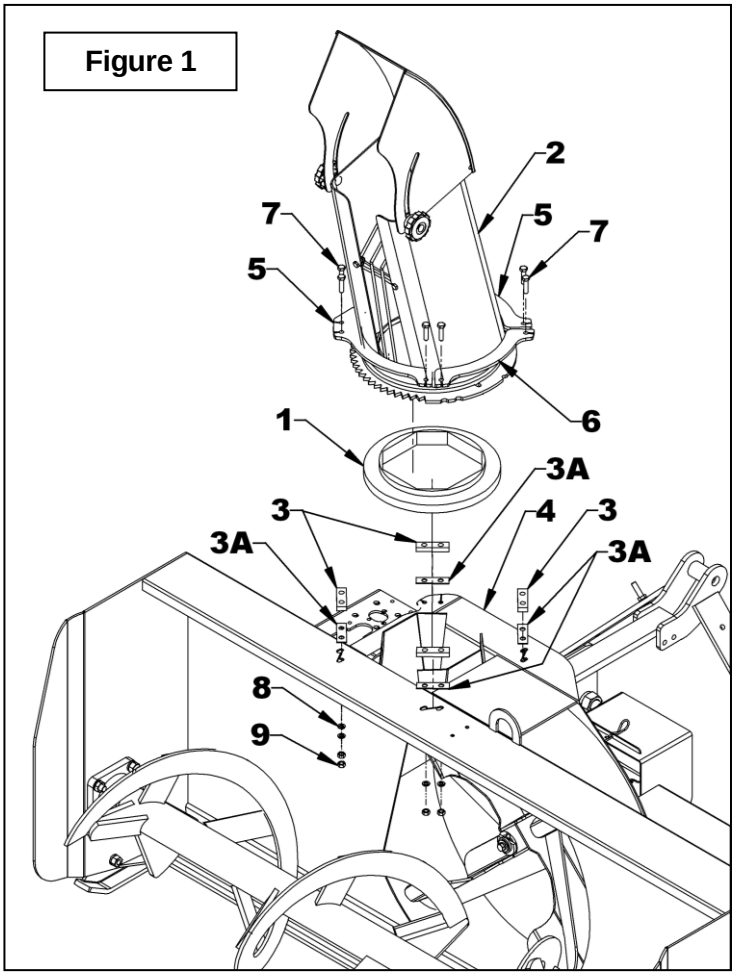

Installation of Snowblower with Three Point Hitch

(Figures 2-2A)

1. **Figure 2:** Remove the nut (item 5) and the lockwasher (item 4) from the cat.1 lower hitch pins (item 2).
2. **Figure 2:** Place the jam nut (item 3) so to obtain 1.38" (35mm) minimum between the edge of the hole of the lower hitch pin and the jam nut.
3. **Figure 2:** Insert the lower hitch pins (item 2) in the lower hole of the hitch (item 1) and secure with the lockwasher (item 4) and the nut (item 5). Tighten at 440 ft-lb (597 N-M).
4. **Figure 2:** Install the eyebolt (item 6) in the upper hole of the left or right side of the three point hitch by screwing the eyebolt nut to the top and locking eyebolt in place with a 3/8" serrated flange nut (item 7).
5. **Figure 2A:** Attach tractor lower links (item 2) to the hitch pins (item 1) and secure with the linchpins (item 3).
6. **Figure 2A:** Attach the tractor upper link (item 4) between the upper attaching plates (item 6) using the tractor pin and linchpin (item 5 – not included).
7. **Figure 2A:** Adjust the snowblower using the tractor upper link (item 4) as to bring the snowblower parallel to ground level.
8. **Figure 2A:** Set the tractor anti-sway turnbuckles (item 7) so the snowblower does not sway. Be sure there is no contact with the tires.

⚠ CAUTION

Before connecting snowblower driveline to tractor drive shaft, make sure driveline is not too long in raised, lowered and middle position. If the driveline is too long it must be shortened, to avoid damaged to tractor. See pages 26 to 28 for instructions.

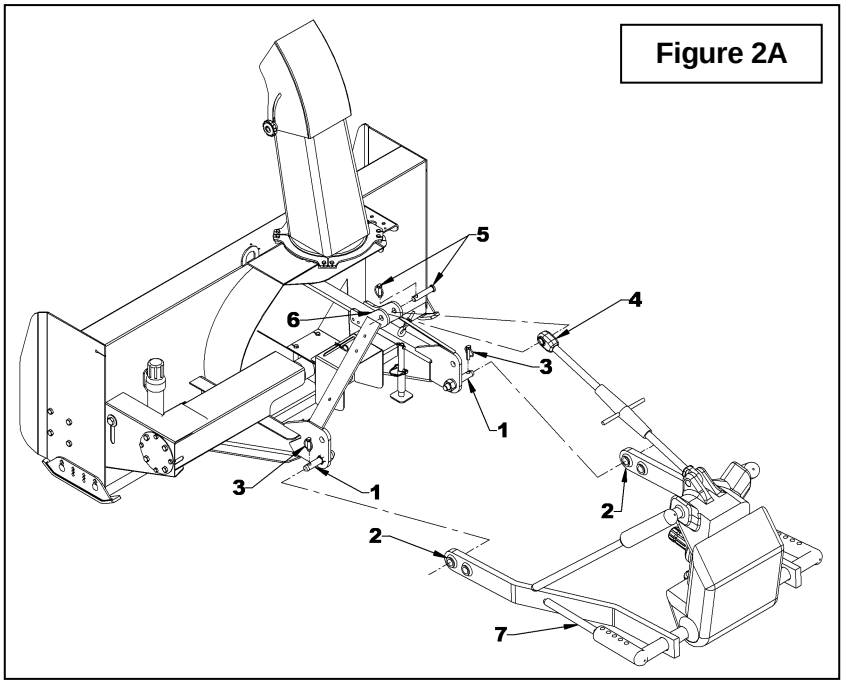

Figure 2A

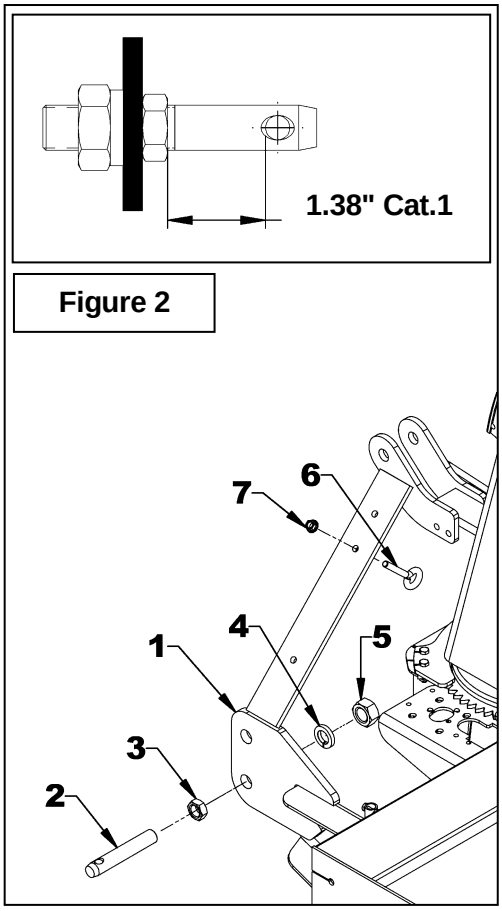

Figure 2

Installation of Snowblower with Quick Hitch

(Figures 3-3A)

1. **Figure 3:** Remove the nut (item 5) and the lockwasher (item 4) from the cat.1 lower hitch pins (item 2).
2. **Figure 3:** Place the jam nut (item 3) so to obtain 2 1/4" (57mm) minimum between the edge of the hole of the lower hitch pin and the jam nut.
3. **Figure 3:** Insert the lower hitch pins (item 2) in the upper hole of the hitch (item 1) and secure with the lockwasher (item 4) and the nut (item 5). Tighten at 440 ft-lb (597 N-M).
4. **Figure 3:** Insert a 2 1/8" lg bushing (item 8) on each pin and lock in place with two 7/16" linchpins (item 9).
5. **Figure 3:** Insert the 1 7/8" lg bushing (item 10) between the upper attaching plates and lock in place with the tractor hitch pin and linchpin (items 11-12 – not included).
6. **Figure 3:** Install the eyebolt (item 6) in the upper hole of the left or right side of the three point hitch by screwing the eyebolt nut to the top and locking eyebolt in place with a 3/8" serrated flange nut (item 7).
7. **Figure 3A:** Make sure the quick hitch latches are closed. Lower the three point so the quick hitch hooks are lower than the hitch pins of the snowblower. Move back slowly the tractor toward the snowblower until hooks are below the hitch pins of the snowblower. Raise the three point until the quick hitch latches close on the snowblower hitch pins to lock the system.

⚠ CAUTION

Before connecting snowblower driveline to tractor drive shaft, make sure driveline is not too long in raised, lowered and middle position. If the driveline is too long it must be shortened, to avoid damaged to tractor. See pages 26 to 28 for instructions.

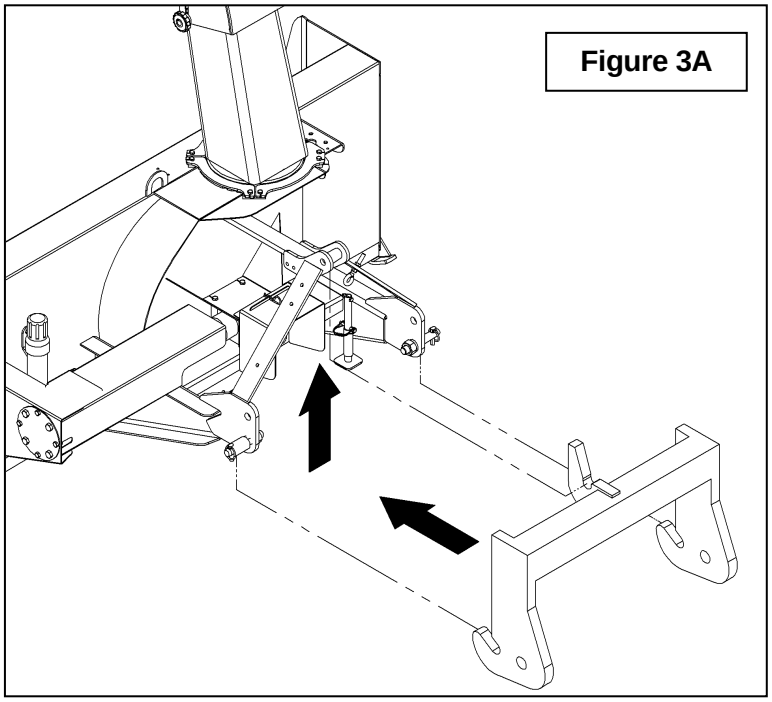

Figure 3A

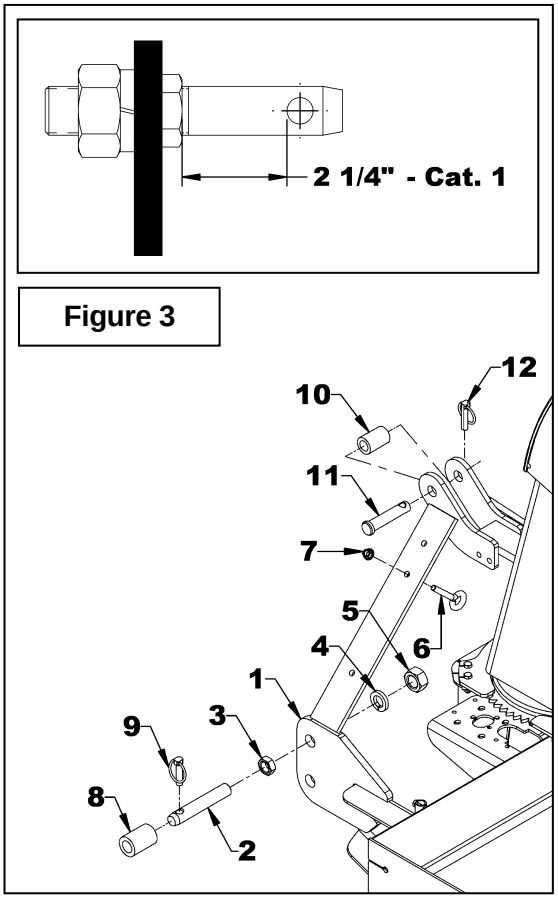

Figure 3

Installation of the Manual Rotation BER0077

(Figures 4-5-6-7)

NOTE: The rotation handle may be installed on the left or right of the three point hitch.

1. Install the chute according to the instructions contained in the snowblower Operator's Manual, with the four 1/16" thick spacers provided with this BER0077 kit.
2. **Figure 4:** Install the rotation tube support (item 1) on the chute base. Secure using a 1/4"NC x 3/4" bolt, a 1/4" lockwasher and a 1/4"NC nut (items 6-7-8). Do not tighten.
3. **Figure 4:** Insert a 1 5/16" plastic bushing (item 2) in the rotation tube support (item 1), then insert the rotation worm (item 3).
4. **Figure 4:** Insert the other 1 5/16" plastic bushing (item 5) in the rotation worm support (item 4), and then slide on the rotation worm. Secure with two 1/4"NC x 3/4" bolts and 1/4"NC nuts (items 9-10-11). Do not tighten.
5. **Figure 5:** Install the bracket (item 1) on the 3 point right or left hitch using two 3/8"NC x 1 1/4" bolts, 3/8" lockwashers and 3/8"NC nuts (items 2-3-4). Tighten securely.
6. **Figure 5:** Install handle support bracket (item 5) on the bracket (item 1) using a 3/4''NC x 1 1/2'' bolt, 3/4''lockwasher and 3/4''NC nut (items 6-7-8). Do not tighten.
7. **Figure 5:** Install the plastic grommet (item 9) in the handle support (item 10).
8. **Figure 5:** Insert handle support (item 10) inside the handle support bracket (item 5). Fasten loosely with a 3/8"NC x 1/2'' square head set screw (item 11).

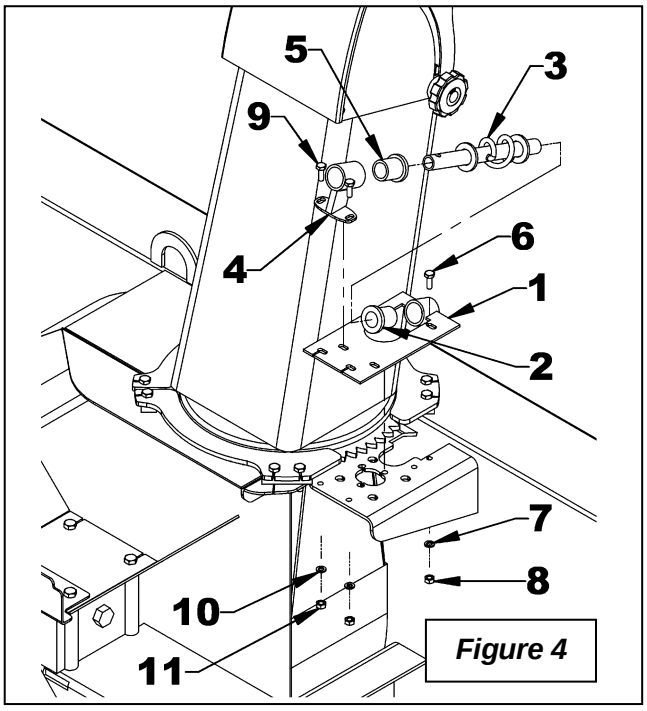

Figure 4

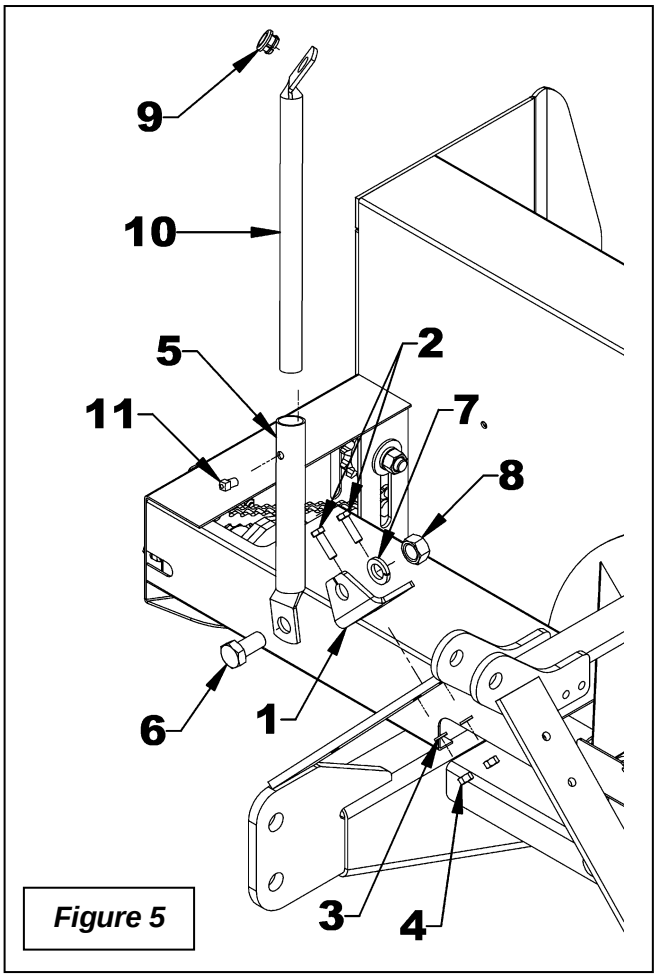

Figure 5

9. **Figure 6:** Install plastic handle (item 5) over the rotation handle (item 6).
10. **Figure 6:** Insert assembled rotation tube (item 1) inside the rotation worm assembly (items 2). Align holes and insert a 10-24NC x 1'' allen socket head capscrew (item 3) making sure the capscrew sinks into the worm. Secure with a nylon insert locknut (item 4). Adjust the height of the handle support according to your needs and shorten if necessary.
11. **Figure 6:** Insert the rotation handle (item 6) inside the grommet and inside the rotation tube (item 1). Select desired length, align nearest holes and secure with a 4mm x 80mm hairpin (item 8).
12. **Figure 7** Adjust the rotation tube support (item 3) and the rotation worm support (item 1) by moving them toward the chute so the rotation worm is engaged between the gear teeth of the chute. Make sure the rotation worm and the bushings are well aligned. Tighten slightly the three 1/4"NC x 3/4" bolts and the three 1/4"NC nuts (item 2).
13. **Figure 7:** Rotate the chute completely to the right then to the left using the rotation handle (item 4).
    - If the chute is too hard to turn it's because the rotation worm is engaged too deep between the gear teeth, move the worm slightly away from the gear teeth and try again.
    - If the chute rotates with difficulty because the teeth do not engage or engage incorrectly, adjust the rotation handle support toward the chute and redo the steps.
14. **Figure 7:** Make sure the worm engages completely when it reaches the end of the chute gear. The rotation handle is well adjusted when the chute rotates easily without straining. Tighten firmly the three 1/4"NC x 3/4" bolts and the three 1/4"NC nuts (item 5).
15. **Figure 7:** After the snowblower is mounted to the tractor, you may adjust the rotation handle position and height to a comfortable and safe operating position. When the desired position is set for working position, make sure the rotation handle is not interfering with any parts of the tractor while on transport position (snowblower raised to maximum). Tighten firmly the 3/8"NC x 1/2'' square head setscrew 3/8"NC x 1/2" (item 5) to the desired height. Then tighten firmly the 3/4"NC x 1 1/2" bolt (item 6) to the desired position.
16. Lubricate the rotation worm.

NOTE: To insure the manual rotation operates properly, the handle support (**fig.6**, item 7) must be positioned the closest possible to the top link mounting point of the three point hitch while making sure it does not come into contact with the operator's seat when the snowblower is fully raised.

CAUTION: To avoid personal injury, check the full lifting range of the snowblower, to ensure that the chute rotation handle is clear of the operator's area when the snowblower is in raised position.

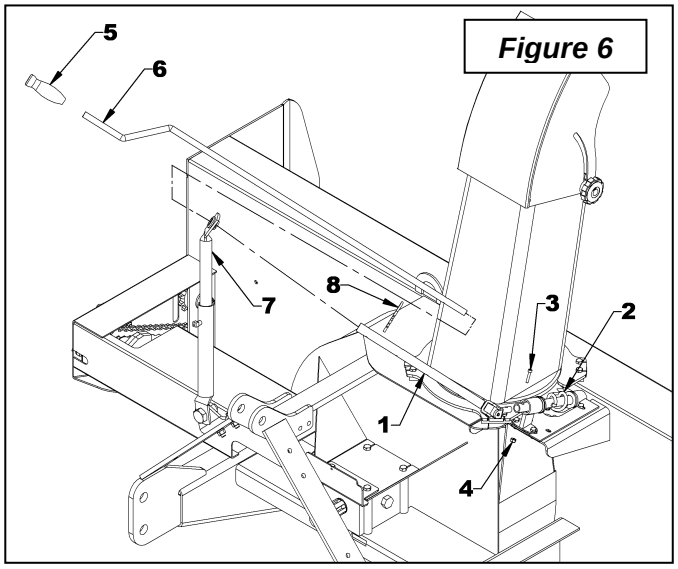

Figure 6

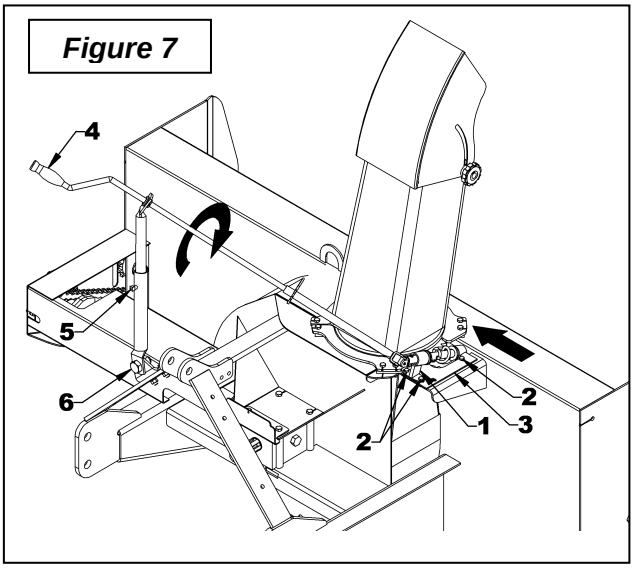

Figure 7

Installation of the Hydraulic Rotation BER0078

(Figures 8 to 12)

1. Install the chute according to the instructions contained in the snowblower Operator's Manual.
2. **Figure 8:** Place the motor spacer (item 2) on the motor top (item 1) by aligning the holes. Install the motor (item 1) under the frame base of the snowblower and secure with four 3/8''NC x 1'' bolts (item 3), four 3/8" lockwashers (item 4) and four 3/8" (7/16" hole) flat washers (item 5). Torque slightly.
3. **Figure 8:** Make sure the Woodruf key is on the motor shaft and insert the motor gear (item 6) on the shaft. Secure with a 1/4''NC x 3/4" bolt (item 7), a 1/4" lockwasher (item 8) and a 1/4" (5/16" hole) flat washer (item 9).
4. **Figure 9: NOT INCLUDED:** Using thread sealant, install a 1/4"NPT female x 1/2"NPT male reducer (item 2), a male quick coupler (item 3) and a dust cap (item 4) on each straight end of the hoses (item 1).

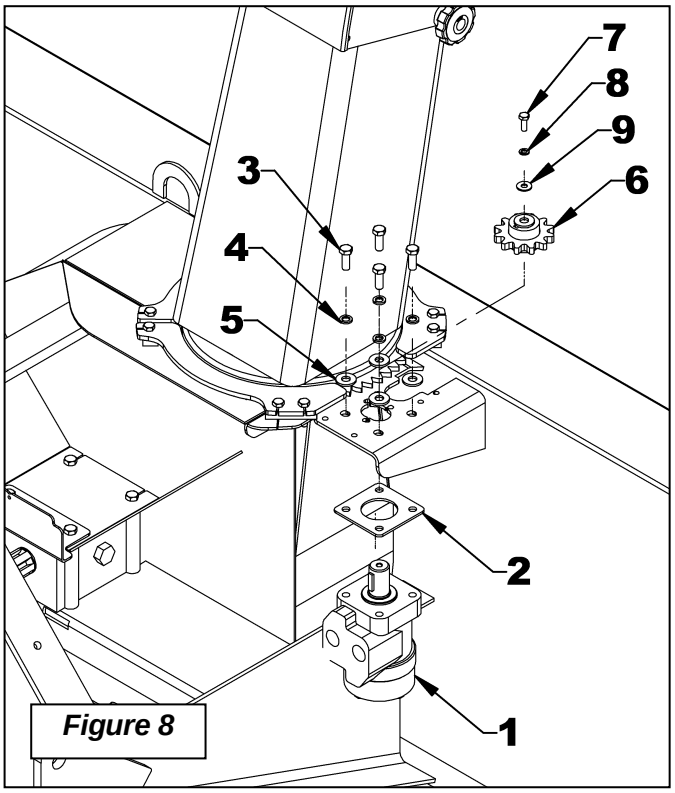

Figure 8

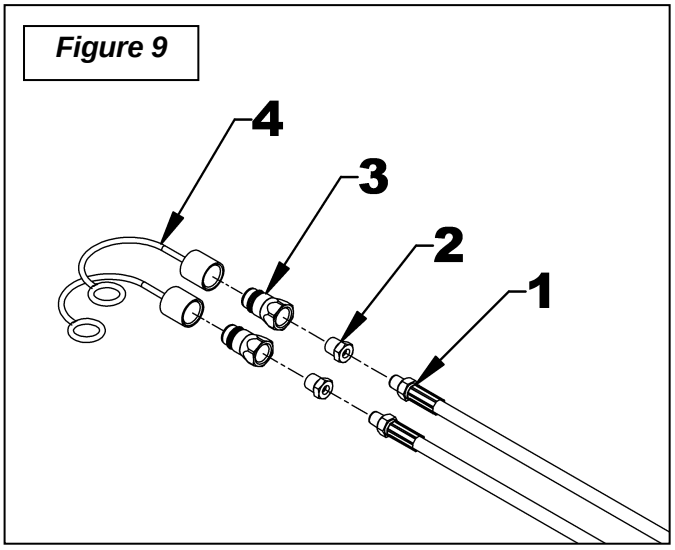

Figure 9

⚠ CAUTION

To avoid serious personal injury. Escaping hydraulic/ diesel fluid under pressure can penetrate the skin causing serious injury.

- **Do not use your hands to check for leaks. Use a piece of cardboard or paper to search for leaks.**

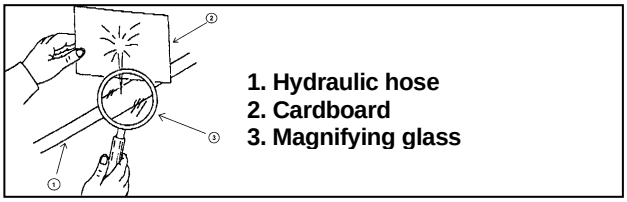

- **Stop engine and relieve pressure before connecting or disconnecting lines.**
- **Tighten all connections before starting engine or pressurizing lines.**
- **If any fluid is injected into the skin, obtain medical attention immediately or gangrene may result.**

5. **FIGURE 10:** Install a 0.052" flow restrictor (item 2) in each motor input (item 1).
6. **FIGURE 10: NOT INCLUDED:** Connect the two hoses (item 3) on the motor flow restrictors (item 2). Direct the hose elbows toward the snowblower upper arm.
7. **FIGURE 10: NOT INCLUDED:** Run hoses on the snowblower with suitable bend, staying away from sharp edges, nor compromise the snowblower maintenance. Attach to the right or left snowblower three point arm with a hose clamp (item 4), a 3/8"NC x 1 1/2" bolt (item 5) and a 3/8"NC nylon insert locknut (item 6).
8. **NOT INCLUDED:** Connect hoses to tractor and make sure to raise and lower the snowblower in extreme positions, and check if hoses are long enough to not interfere with any parts. Attach hoses with nylon tie wrap to appropriate places. Rotate the chute to the right and to the left.
9. **FIGURE 11:** Motor adjustment: Push the motor toward the chute as to well set the gear teeth (item 1) without letting any play between teeth. Tighten firmly the four 3/8"NC x 1" bolts (item 2). If the rotation does not operate correctly, redo the adjustment.
10. **FIGURE 11:** Install the gear shield (item 3) and secure with two 1/4"NC x 3/4" bolts (item 4), two 1/4" lockwashers and two 1/4"NC nuts (items 5-6), as illustrated.

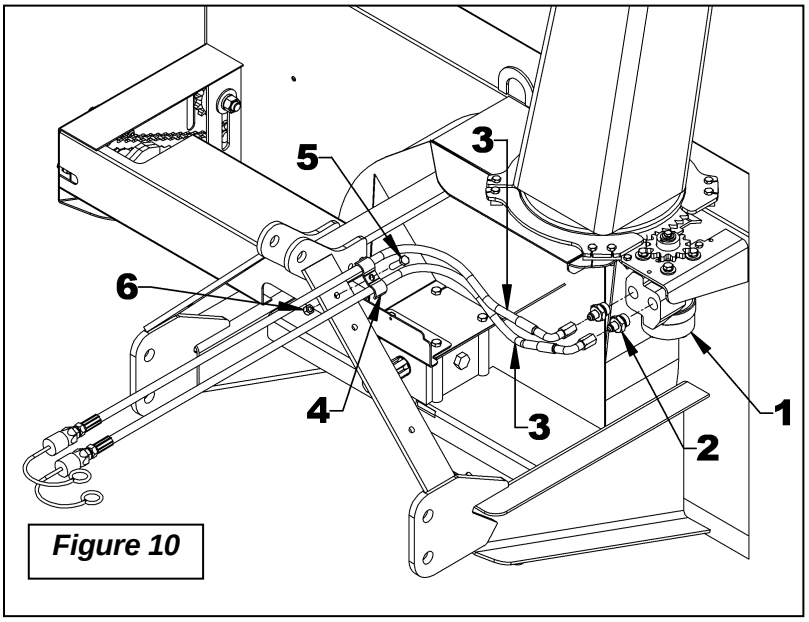

Figure 10

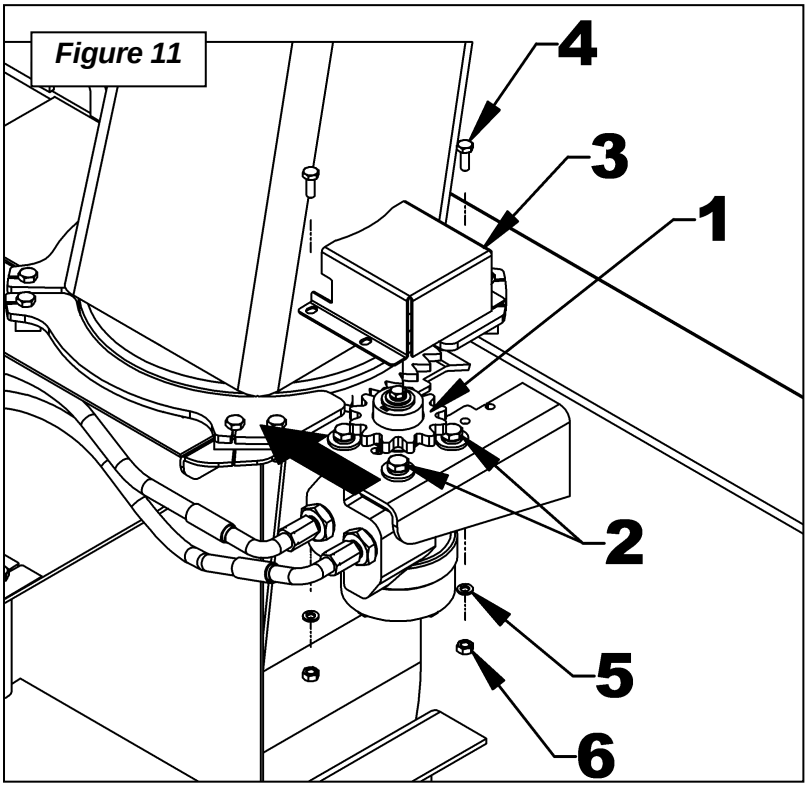

Figure 11

PROBLEM: HYDRAULIC CHUTE ROTATION IS SLOW OR DOESN'T TURN

When activating the chute rotation, it turns very slowly or not at all.

⚠ WARNING

To avoid serious personal injury, always wear safety glasses while doing the instructions below.

SOLUTION:

1. Check if the tractor valve works well. Test it by plugging another piece of equipment to the valve. If it does not work well, refer to the appropriate operator's manual.
2. **Figure 12:** Check if the chute itself rotates well. To do so, remove the bolt , lockwasher, flat washer (items 5-4-3) and the motor gear (item 2) attached to the motor shaft (item 1) and check if the chute rotates well in both directions by turning it by hand. If it does not rotate well, correct the problem by checking if there is some excess wear or debris locked between components.
3. **Figure 12:** Check if there is residue in the hydraulic circuit. To do so, first verify if the chute rotates well in one direction. If so, remove the bolt, lockwasher, flat washer (items 5-4-3) and the motor gear (item 2) attached to the motor shaft (item 1) and activate the rotation in the direction the motor turns well for approximately 1 minute to evacuate the residues. Then rotate the chute in the direction it did not turn well and check if the problem is resolved. - If not or if the chute does not rotate well in either direction, disconnect the motor hoses, remove the two flow restrictors (item 6) attached to the motor inputs (item 1) and inspect the holes of the two flow restrictors carefully. Remove the residues if needed. If no residue is present, disconnect hoses and clean them with compressed air. - If the problem persists, check if there is residue inside the motor (item 1). Clean with compressed air the inside of the two motor inputs. You can also manually turn the motor shaft in both directions while shooting compressed air.

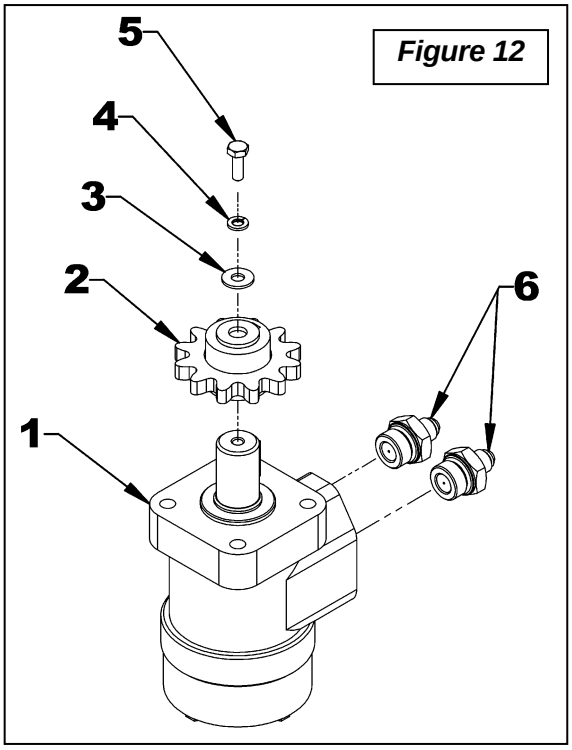

Figure 12

IMPORTANT: When removing connectors, always make sure to install the plugs and caps on the hoses and tractor valve connectors. This will prevent contamination of the hydraulic circuit and obstruction of the flow restrictor hole.

Installation of the Hydraulic Deflector BER0079A

(Figures 13 to 18)

1. Install the chute according to the instructions in the snowblower Operator Manual.
2. **Figure 13:** Remove the two manual adjustment knobs (item 1) and bolts (item 2) from each side of deflector and replace with two 5/16” NC x 3/4” carriage bolts (item 3), using original nylon washers (item 5-6) and two 5/16" NC nylon insert locknuts (item 4). Place one nylon washer outside the deflector and one (item 6) between the deflector and the chute base. Do not tighten completely to allow deflector movement by hand.
3. **Figures 14 & 16:** Place the deflector bracket (item1) on center of chute deflector (item 2), flush with bottom edge of deflector (detail A). Using this bracket as a template, drill four 9/32" holes in deflector.
4. **Figure 15:** Bolt in place with four 1/4" x 3/4" allen flat socket head capscrews (item 3), 1/4" lockwashers and 1/4"NC hex nuts (item 4), with the capscrews heads inside the chute. Tighten so that capscrews heads sink into deflector surface.
5. **Figure 15:** Retract hydraulic cylinder rod (item 5) completely and secure to deflector bracket (item 1) and deflector base bracket (item 6), using the two cylinder pins (item 7) and the two cotter pins (item 8). Direct the cylinder ports toward the snowblower center.
6. **Figure 15:** Open deflector to maximum so that actuator rod retracts completely. Place deflector base bracket (item 6) on the center rear of chute and using the bracket as a template, drill four 9/32" holes in chute.
7. **Figure 15:** Bolt deflector base bracket (item 6) to chute using four 1/4" x 3/4" allen flat socket head capscrews (item 9), 1/4" lockwashers and 1/4"NC hex nuts (item 10), with the capscrews heads inside the chute. Tighten so that capscrews heads sink into chute base surface.

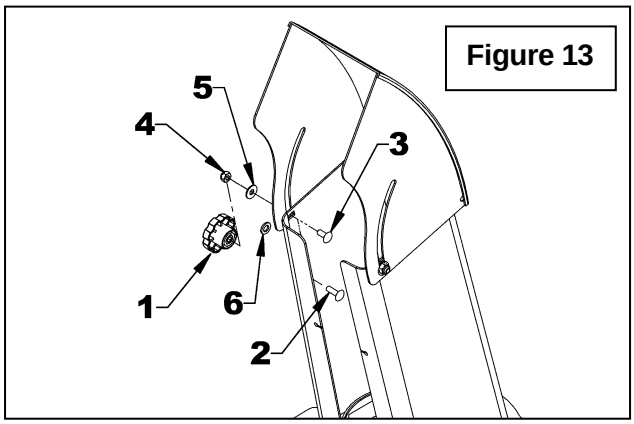

Figure 13

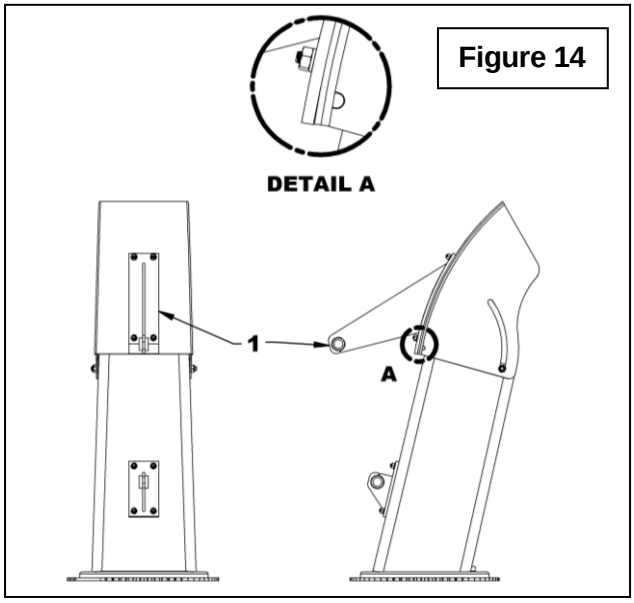

Figure 14

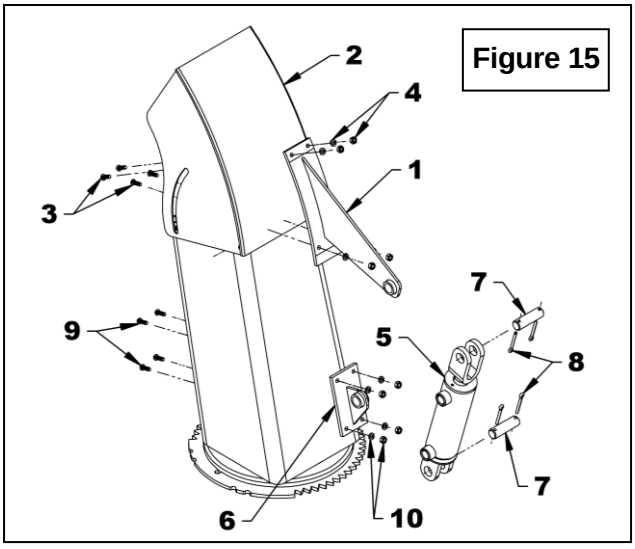

Figure 15

8. **Figure 16:** Install the hose support (item 1) on the three point upper hitch bracket (item 2) right or left (right one is recommended) using two 3/8’’NC x 1 1/2’’ bolts (item 3) and two 3/8"NC nylon insert locknuts (item 4).
9. **Figure 16:** With thread sealant, install a 90° 3/8” NPT male x 1/4” NPT swivel female elbow (item 5) in each cylinder port (item 6). Direct elbows upward by placing the lower one so that the hose does not interfere with the upper hose.
10. **Figure 17: NOT INCLUDED:** With thread sealant, install a 1/4" NPT female x 1/2" NPT male reducer (item 2), a male quick coupler (item 3) and a dust cap (item 4) on each hose straight end (item 1).
11. **Figure 17: NOT INCLUDED:** Connect the two hoses (item 1) to the cylinder elbows (item 2).

    NOTE: The Figure 18 is a suggested presentation for hose routing. In that way, it prevents the hoses from getting clamped in the chute gear. However, other ways are also possible. In any way, make sure there is enough play in the hoses for the chute to rotate freely from left to right without forcing on hoses.
12. **Figure 18: NOT INCLUDED:** Run hoses on the snowblower with suitable bend, staying away from sharp edges, nor compromise the snowblower maintenance. Attach to the hose support (item 3) with a hose clamp (item 4), a 3/8’’NC x 1 1/2’’ bolt (item 5) and a 3/8"NC nylon insert locknut (item 6).
13. **NOT INCLUDED:** Connect hoses to tractor and make sure to raise and lower the snowblower in extreme positions, and check if hoses are long enough to not interfere with any parts. Attach hoses with nylon tie wrap to appropriate places. Move the deflector from top to bottom to verify operation.

⚠ CAUTION

To avoid serious personal injury. Escaping hydraulic/ diesel fluid under pressure can penetrate the skin causing serious injury.

- **Do not use your hands to check for leaks. Use a piece of cardboard or paper to search for leaks.**

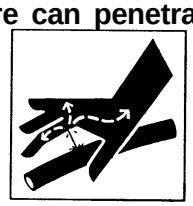

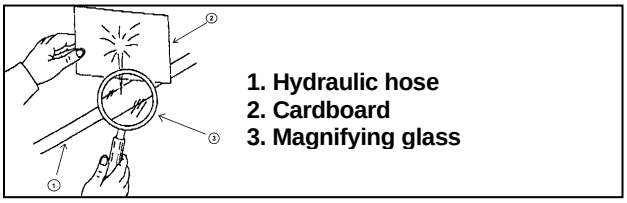

- **Stop engine and relieve pressure before connecting or disconnecting lines.**
- **Tighten all connections before starting engine or pressurizing lines.**
- **If any fluid is injected into the skin, obtain medical attention immediately or gangrene may result.**

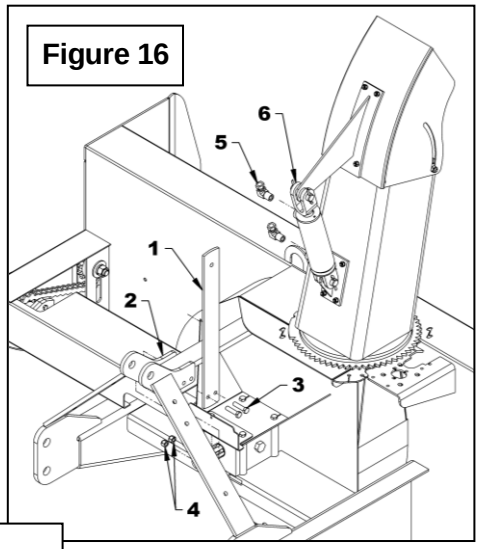

Figure 16

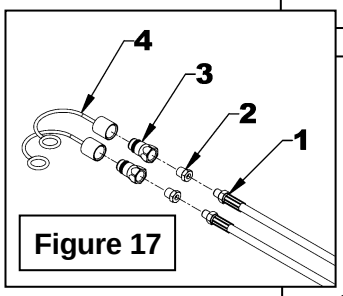

Figure 17

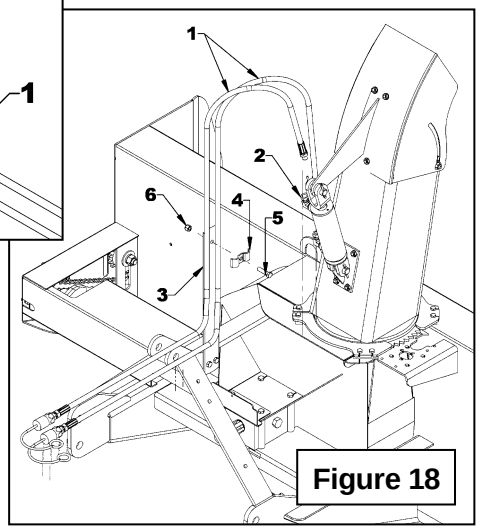

Figure 18

Installation of the Electric Deflector BER0080

(Figures 19 to 23 & Electric Diagram)

PREPARING THE CHUTE ***(Figures 19-20)***

1. **Figure 19:** Remove the two manual adjustment knobs and tighten the two original 5/16" NC x 1" carriage bolts (item 1), the original nylon washers (item 2), two 5/16" (3/8" hole) flat washers (item 12) and two 5/16" NC nylon insert nuts (item 3). Leave a small gap (about 1/32") between the side of the deflector and the outer nylon washer.

   NOTE: The deflector must move freely.

2. **Figure 19:** Place the deflector bracket (item 5) in the middle of the chute deflector (item 11) and align with the bottom edge of the deflector. Using the bracket as a template, drill four 1/2" holes in the deflector and secure in place with four 5/16" NC x 3/4" Allen flat head setscrews (item 4) and serrated flange nuts (item 6) placing the setscrew head inside the chute. Tighten until the setscrew head sinks into the inside surface of the deflector.

3. **Figure 19:** Retract the actuator rod (item 10) completely. Secure the actuator to the deflector bracket (item 5) and to the base bracket (item 7) with two 3/8" NC x 1 1/2" bolts (item 8) and two 3/8"NC nylon insert nuts (item 9). Secure without tightening to allow movements.

4. **Figure 19:** Open deflector (item 11) completely and temporarily tighten the two 5/16"NC nylon insert nuts (item 3), to prevent the deflector movement (item 11).

5. **Figure 19A: Position of the base bracket:** Fix a paper sheet on the back of the chute, to prevent scratches. Raise the base bracket up the back of the chute, as high as possible and draw a pencil line on top of the base bracket. Then, slide the base bracket as low as possible and draw another line on top of the base bracket. There should be a 1/8" gap between the two lines. Draw a line between those two lines and align the top of the base bracket with this line, to center the gap.

6. **Figure 19:** Using the bracket as a template, drill four 1/2" holes in the chute. Remove the paper sheet. Attach the base bracket (item 7) with four 5/16" NC x 3/4" allen flat head setscrews (item 4) and serrated flange nuts (item 6) placing the setscrew head inside the chute. Tighten until the setscrew head sinks into the inside surface.

7. **Figure 19:** Untighten the two 5/16"NC nylon insert nuts (item 3) and leave a small gap (about 1/32") between the side of the deflector and the outer nylon washer.

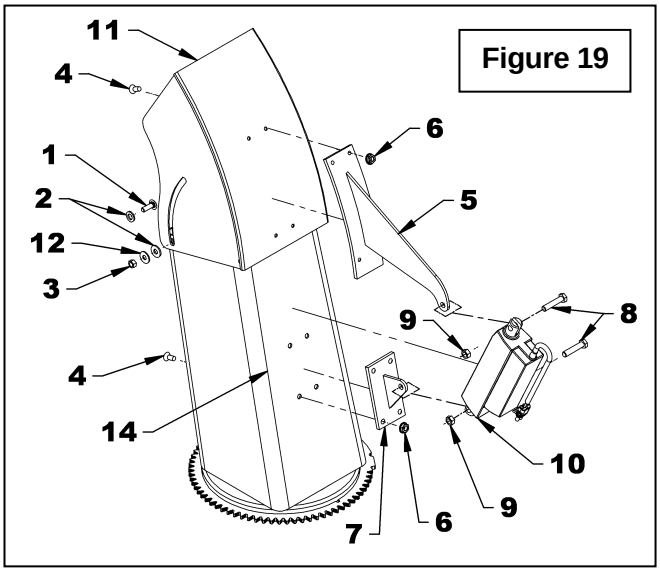

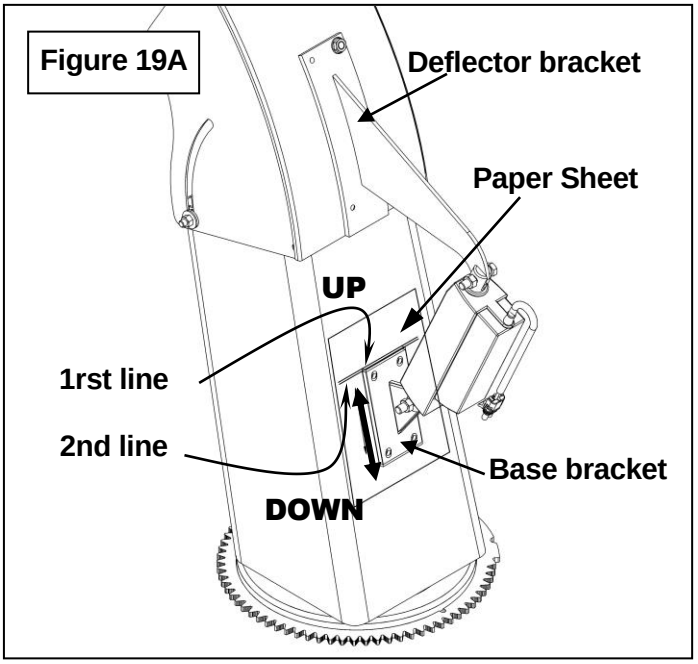

8. **Figure 20:** Install the hose support (item 1) using two 3/8"NC x 1 1/2" hex bolts (item 3) and two 3/8"NC nylon insert locknuts (item 4). The hose support can be installed on the right or left side of the three point upper hitch bracket (item 2).
9. Rotate left the chute to maximum and attach the actuator harness to the hose support with tie wraps, leaving enough length for play in the harness. Then rotate right the chute to maximum and check if the harness is long enough, to not be clamped in any snowblower parts (gear etc.).
10. Bring the harness as close as possible to the tractor and attach with tie wraps to appropriate places.

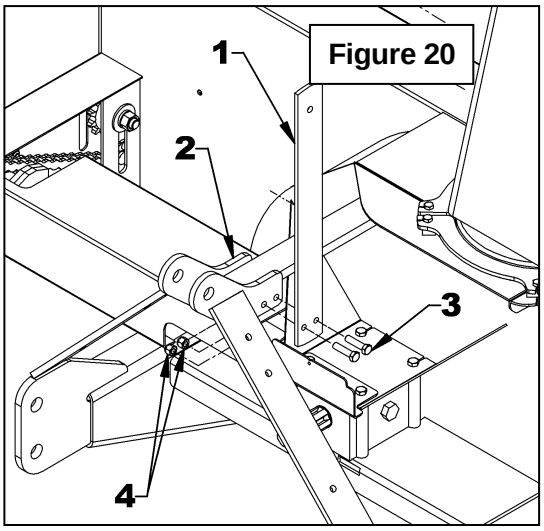

Figure 20

INSTALLATION OF ELECTRICAL COMPONENTS
(Figures 21 to 23)

1. **Figure 21:** Place the switchbox (item 1) on the lever in a position that will be comfortable when the hand is on the knob and attach with the box clamp (item 5), two 1/4" NC x 1" hex bolts and two 1/4" lockwashers (items 3-4).

   NOTE: Tighten the bolts just enough to secure the clamp and the switchbox on the lever. DO NOT TIGHTEN TOO MUCH so as not to deform the clamp. Make sure the clamp is in the proper position so the lower openings on the switchbox are not blocked. See Figures 4 and 5.

   NOTE : If the switch is difficult to reach when installed on the lever, install it on the dashboard instead by drilling a Ø1/2" in an area that will not interfere with the existing controls or the electrical system.
2. Connect the harness female connector with two wires (red and black) to the actuator harness male connectors. Bring the harness to the tractor switch box. Raise and lower the snowblower in extreme positions, and check if the harness is long enough to not interfere with any parts.
3. **Figure 21:** Strip 1/4" from the end of the wires (items 7-9) as well as from the two yellow wires (items 6).
4. **Figure 21:** Twist the red wire end (item 7) with a yellow wire (item 6A) and the black wire end (item 9) with the other yellow wire (item 6B).
5. **Figure 21:** Install the two identical round terminals (item 8) on the twisted ends.

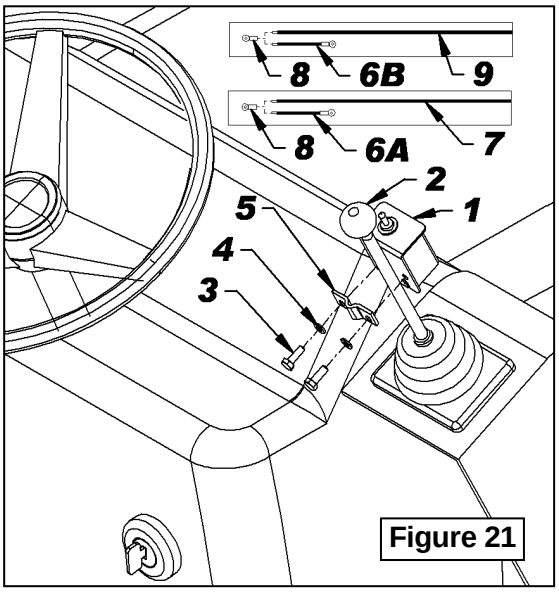

Figure 21

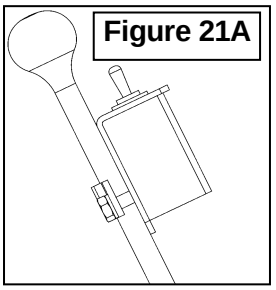
Figure 21A

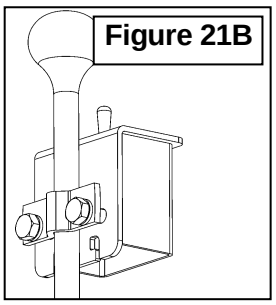
Figure 21B

6. **Figure 22:** Connect the two wire assemblies as illustrated by connecting the red wire to the "B" blade and the yellow wire attached to the red wire to the "E" blade. Then connect the black wire to the "A" blade and the yellow wire to the "F" blade.
7. **Figure 24:** Connect the two remaining wires, the red wire to the "C" blade and the black wire to the "D" blade.
8. **Figure 25:** Insert the switch (item 4) in the switchbox (item 2) and secure with the two nuts (items 1-3) in the order illustrated. Install the cap on the switch.
9. Find a wire on the tractor that is an accessory power source which means that only has current when the contact is turned on.
10. Attach the connector tap (item 22, parts section) to the chosen power source and bring the red wire to the connector tap cutting the surplus wire if necessary. Secure in place by lowering the metal blade of the connector.
11. Find a bolt on the tractor that can serve as ground. Bring the black wire to that bolt and attach solidly.
12. Cut the 260" long loom, in two pieces according to the following needed lenght. Install the looms, one on the two wires that start at the snowblower until the switchbox, and the other on the two power supply wires. Cut the surplus if necessary and apply electrical tape to keep the looms closed. Secure everything in place on the tractor with tie wraps.

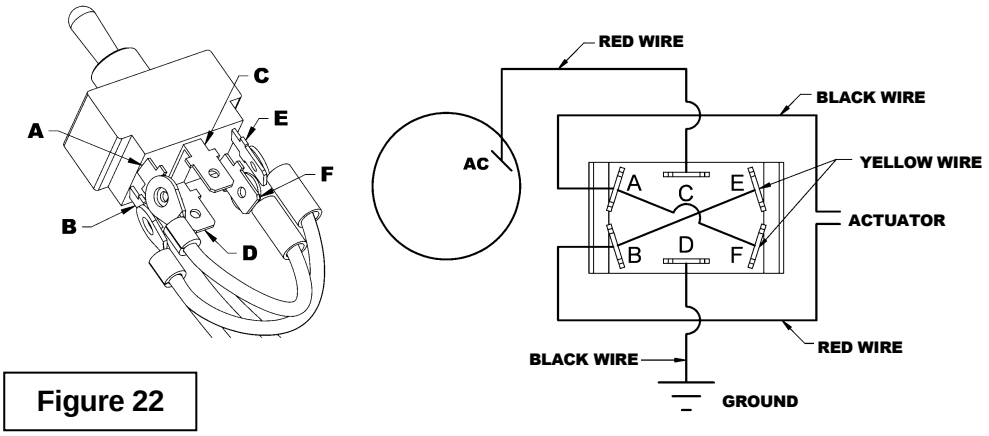

Figure 22

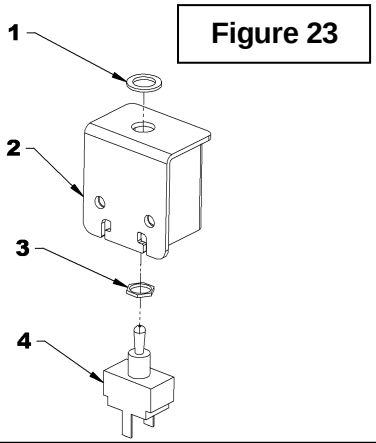

Figure 23

IMPORTANT:
A proper initial installation will give you years of satisfactory service on your equipment. Please read carefully following instructions that have been specially included to help you and ensure you are satisfied with your purchase.

WARNING

Unfortunately, snowblowers will be faced with forgotten or hidden objects under the snow, such as : chain, tires, stones, pieces of wood, etc. In spite of all our efforts, machines are not built to resist all those conditions.

Danger: Tractors Too Big

It is dangerous to use a tractor that is too big and powerful. The tractor will always be able to overload the blower, even if the machine is already at maximum capacity. Furthermore, tractors being very high, the driveline angles will be excessive which means the universal joints will be very vulnerable and the life of the driveline will be dramatically reduced.

How to Determine Driveline Angles

IMPORTANT: To obtain the proper universal joint angles, it is recommended to adjust the three point hitch at the furthest point from the tractor recommended by the manufacturer

The universal joint angle is directly related with the life of driveline. In order to reduce the angle, it is necessary to increase the distance between the snowblower and the tractor.

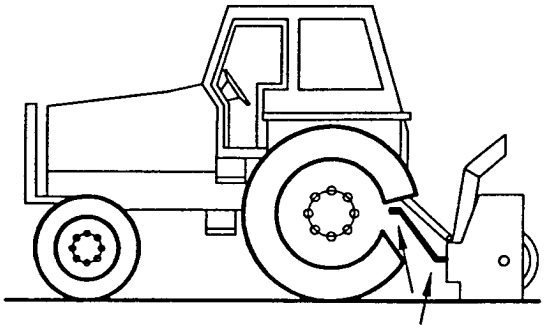

Angles of Driveline Joints Too Large Avoid

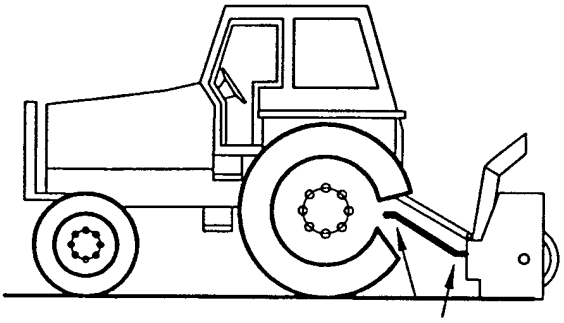

Reasonable Angles of Driveline Joints Acceptable

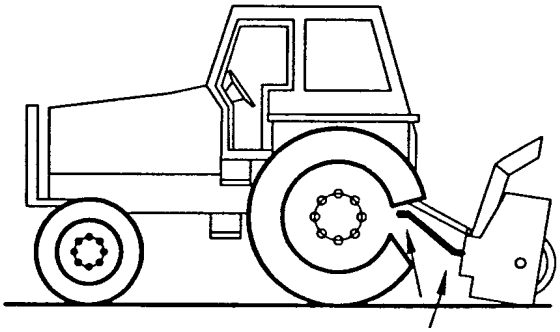

Unequal Angles at Driveline Joints Avoid

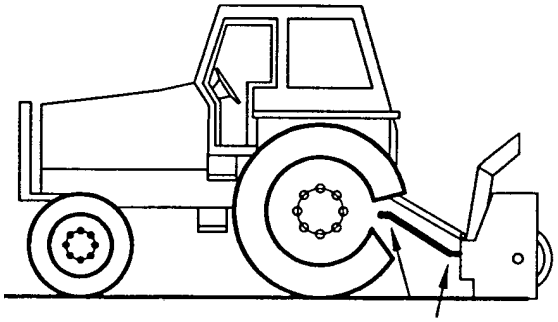

Equal Angles at Driveline Joints Recommended

Angles at Each End of Driveline

A popular habit is to change the snowblower angle in order to obtain a better scraping effect. This practice can become harmful to the driveline since the angle at each end is unequal. This results in a fan speed variation as well as a drastic increase of load on cross and bearings. To be avoided: It is recommended to always keep tractor driveline and snowblower input shaft parallel.

Determining Driveline Length

IMPORTANT: Before using the equipment, make sure the driveline is not too long. At working position, the two half drivelines must intersect each other sufficiently to insure maximum efficiency but there must not be any interference.

1. To determine the **"L"** length for your tractor model first find the **"X"** (Figure 24) factor by measuring the horizontal distance between the end of the tractor's drive shaft and the end of the snowblower's driven shaft when the snowblower is in transport position as shown on Figure.
2. Choose in the table below the **"Y"** factor according to the tractor category and deduct that number from **"X"** (Figure 24) to determine **"L"** (Figure 25) which is the center-to-center length between the universal joints.

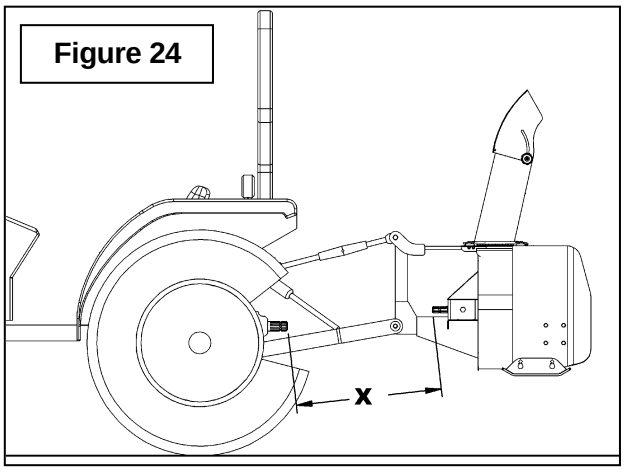

L = X – Y	
3 PTS HITCH CATEGORY	Y
Cat. 1	4 1/2"
Cat. 2	5 1/2"

NOTE: **Before** cutting, make sure the two shafts intersect by at least 7 3/4" when in working position that is when the snowblower rests on the ground.

3. **Figure 25:** Hold the two half-shaft side by side and locate the **"L"** length between the two center-to-center half-shaft universal joints. Mark off the zone to be cut on both halves opposite each half-shaft guard as shown on Figure 25.
4. **Figure 25A:** Cut off inner and outer guard tubes as well as the inner and outer telescopic sections.
5. **Figure 25A:** Cut the guard a second time leaving the same distance between the end of the guard and the end of the shaft as existed before. To obtain the proper distance **"A"** shown on Figure 25A, cut the guard according to the following table:

DISTANCE A	
Male PTO	Female PTO
1 3/4"	1 1/4"

6. **Figure 25A:** File down tubes and remove chips.
7. Apply grease to inside of outer telescopic section.

IMPORTANT: Work with fully guarded shafts only!

Figure 25A

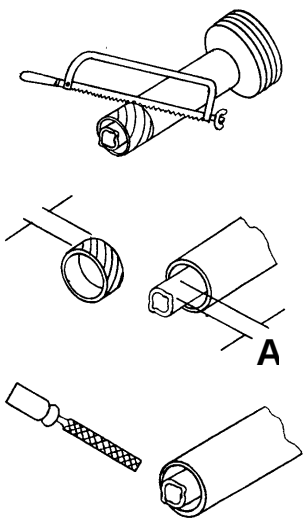

Figure 25

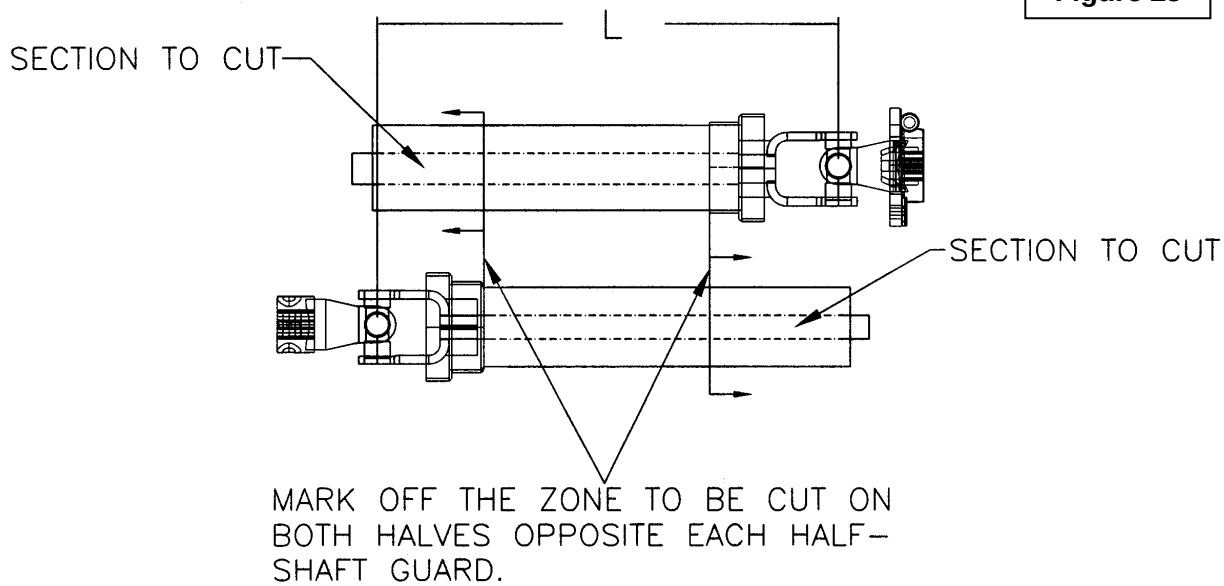

Driveline Installation
(Figures 26-27)

B48C *(Figure 26)*

1. Separate the snowblower from the three point hitch.
2. Remove paint from snowblower gearbox shaft (item 2) and grease driveline sliding surfaces and yoke.
3. Insert the 1/4" x 1/4" x 1 1/4" key (item 1) on the gearbox shaft. Connect the Ø1" driveline yoke to the gearbox shaft (item 2). Secure with a 1/4" NC x 2 1/2" bolt, a 1/4" NC nylon insert locknut and a 1/4" NC x 3/8" setscrew (items 3-4-5). Tighten all bolts according to the ***Torque Specification Table*** at the end of manual.
4. Attach safety chain (item 6) over the upper link (item 7) to prevent the guard from spinning.
5. If the snowblower is put in storing, install the other safety chain (item 6) in the ring (item 8) intended to support the driveline.
6. If the snowblower is installed on the tractor, connect the other driveline part (item 9) to the tractor shaft (item 10). Make sure it is locked safely. Attach then the safety chain (item 6) to appropriate places on the tractor (item 11).

B54C – B64C *(Figure 27)*

1. Separate the snowblower from the three point hitch.
2. Remove paint from snowblower gearbox shaft (item 1) and grease driveline sliding surfaces and yoke.
3. Remove the bolts (items 3) from the driveline yoke (item 2) and connect the driveline to the gearbox (item 1). Make sure the driveline is well attached on the shaft (item 1) while securing with the bolts and nuts (items 3-4) Tighten all bolts according to the ***Torque Specification Table*** at the end of manual
4. Attach safety chain (item 5) over the upper link (item 6) to prevent the guard from spinning.
5. If the snowblower is put in storing, install the other safety chain (item 5) in the ring (item 7) intended to support the driveline.
6. If the snowblower is installed on the tractor, connect the other driveline part (item 8) to the tractor shaft (item 9). Make sure it is locked safely. Attach then the safety chain (item 5) to appropriate places on the tractor (item 10).

WARNING

To avoid serious personal injuries: This shaft turns at up to 2000 RPM. If the collar is not locked to the shaft at tractor end, or if the yoke at the broom end is not secured properly (a "click" must be heard), the driveline can fly loose with great force capable of causing serious injury or death.

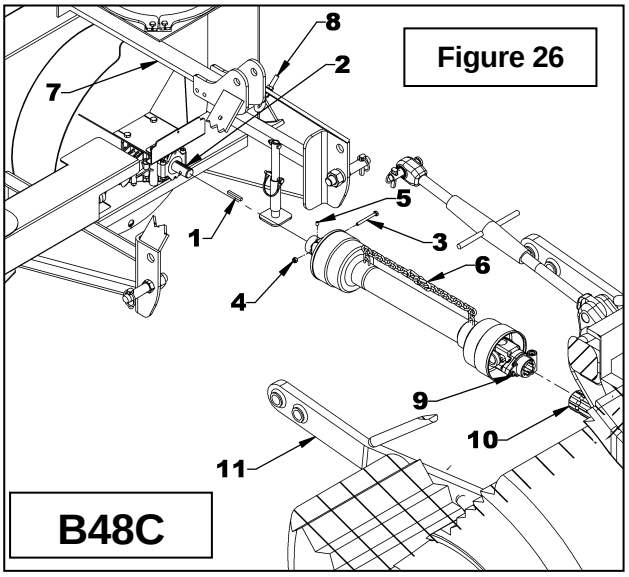

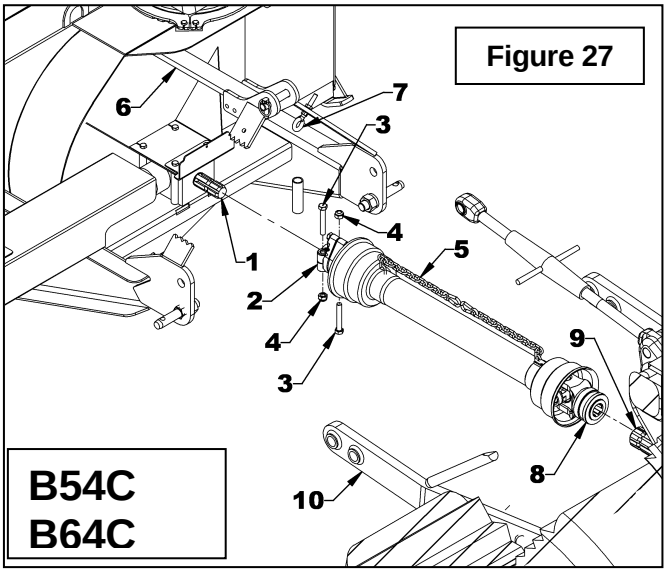

Removing Snowblower from Tractor
(Figures 28 to 29)

Three Point Hitch ***(Figures 30)***

1. Set parking brake and turn engine off.
2. **Figure 28:** Remove the wire round lock pin (item 2), lower the parking stand (item 1) completely to the ground to release all the pressure on the three point and reinsert the wire round lock pin in the lower hole (item 3).
3. **Figure 28A:** Detach upper link (item 4) by removing linchpin and pin (items 6-5).
4. **Figure 28A:** Disconnect driveline from tractor and attach the driveline safety chain (item 8) to the three point hitch eyebolt (item 9).
5. **Figure 28A:** Carefully detach lower links (items 2) from hitch pins (item 1) by removing linchpins (items 3), loosen anti-sway turnbuckles (item 7) and slowly back tractor away from the snowblower.

IMPORTANT: To avoid damages to the snowblower, retorque all bolts after the first 10 hours of operation.

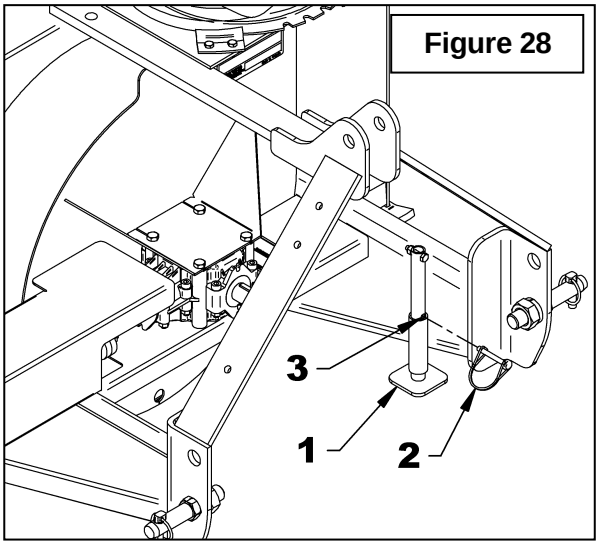

Figure 28

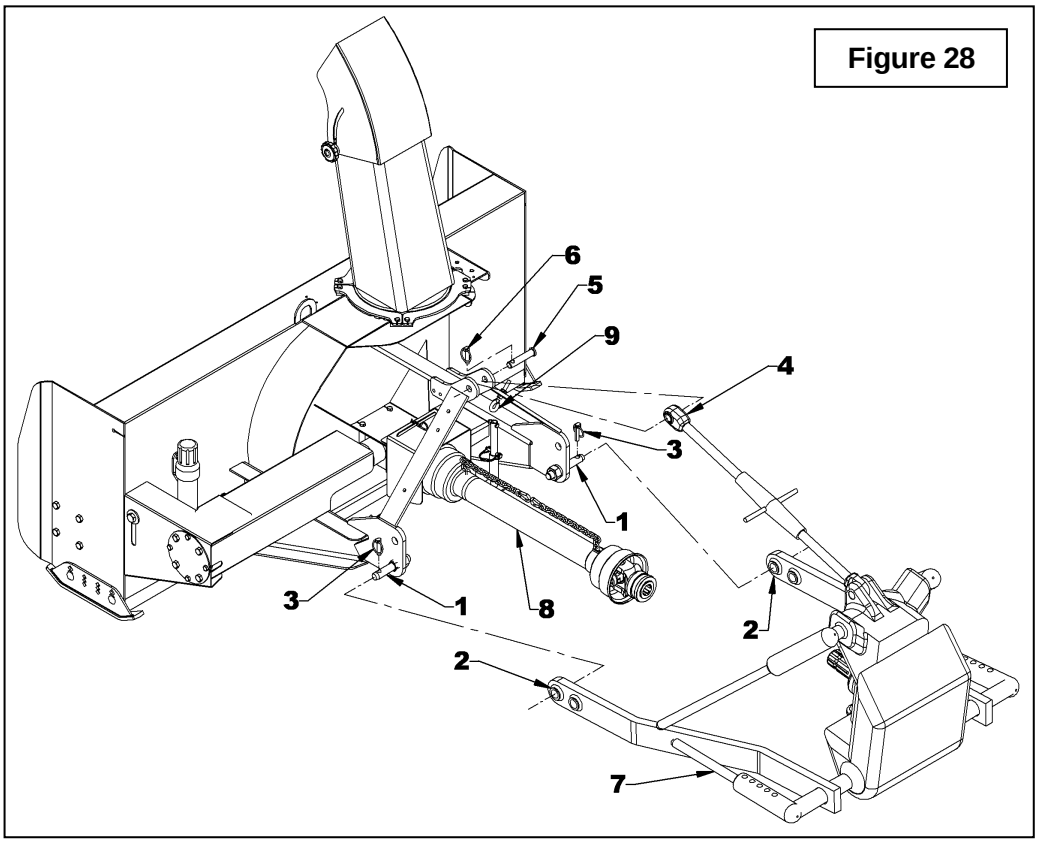

Figure 28

Quick Hitch (Figures 29)

1. Set parking brake and turn engine off.
2. **Figure 29:** Remove the wire round lock pin (item 2), lower the parking stand (item 1) and reinsert the wire round lock pin in the lower hole (item 3).
3. **Figure 29A:** Disconnect driveline (item 1) from tractor and attach the driveline safety chain (item 2) to the three point hitch eyebolt (item 3).
4. **Figure 29A:** Open the lower latches with the quick hitch lever (item 4). Lower the three point until the quick hitch hooks are lower than the hitch pins of the snowblower. Slowly back tractor away from the ed ck

Note: Shield bearings must be greased every 8 working ho

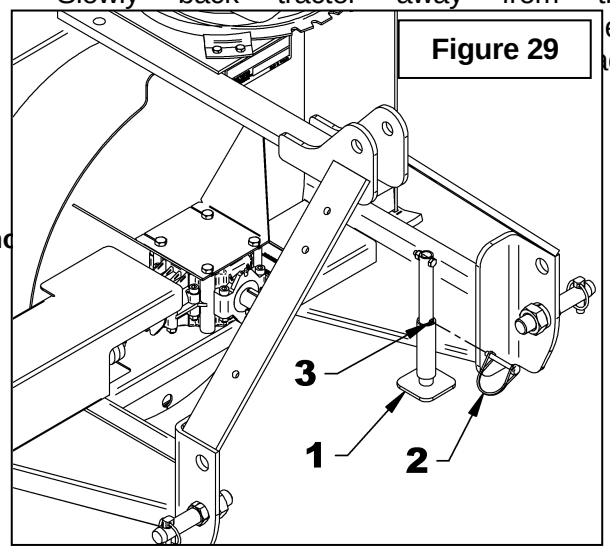

Figure 29

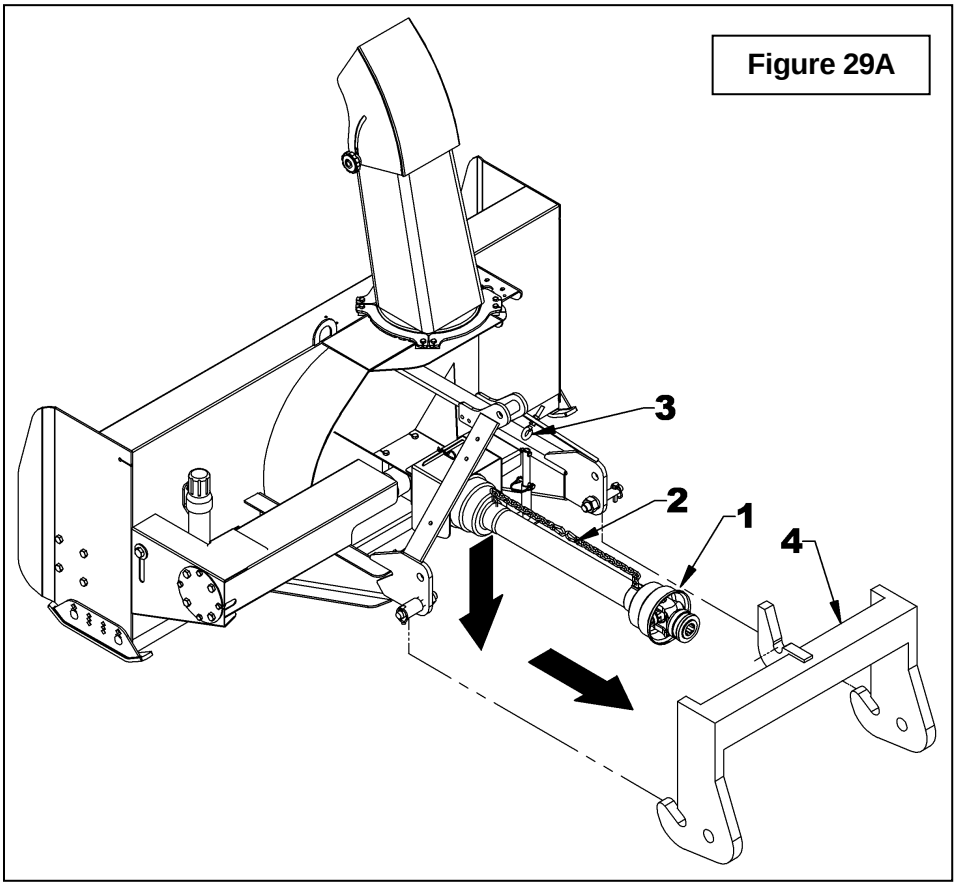

Figure 29A

GENERAL PREPARATION

1. Read the operator's manual carefully before using the tractor and snowblower. Be thoroughly familiar with the controls and proper use of the equipment. Know how to stop the unit and disengage the controls quickly.
2. Make sure the snowblower is clear of snow before engaging the driveline.
3. Make sure the auger and fan operate freely.
4. Check the oil level in the worm Gearbox and if necessary, add 80W90 SAE gear oil, AGMA 5EP oil or equivalent.
5. Check the two shear bolts, one on the driving shaft, and the one on the PTO, for proper tightness.
6. Adjust so that the snowblower skid shoes run level.
7. Wear adequate winter outer garments while operating equipment.

OPERATING CONTROLS

Work and Travel Speed

Working ground speed will depend on the depth and density of the snow to be cleared. Normally, ground speed will range from 4 to 7 MPH for light, dry snowfalls 3 to 6 inches, and 1 to 3 MPH for heavy, wet or drifted snow. To transport, disengage the drive shaft and raise the snowblower to full transport height.

Raising and Lowering the Snowblower

Move the three point lever on right hand side of seat down or forward to lower, and up or rearward to raise.

WARNING

To avoid personal injury, be sure the tractor engine is off, the drive shaft disengaged, and all movement has stopped before making any adjustments.

ADJUSTMENTS

Chain Tension Adjustment
(Figure 29)

The premature wear of the chain may be caused by tension being too tight. It is therefore important not to tighten chain to its maximum.

- To adjust the tension on the drive chain, loosen the bolt (item 1), securing the idler sprocket to the snowblower housing.
- To tighten the chain, lower the bolt. Leave approximately 1/8" deflection in one span of the chain. Retighten securely the bolt holding the idler sprocket.

Skid Shoe Adjustment
(Figure 29)

Adjust the skid shoes so that the snowblower runs level and according to the surface conditions so that stones are not thrown with the snow.

Adjust both skid shoes to the same height to keep the cutting edge level and adjust upwards for smooth surfaces.

Loosen skid shoe bolts (item 2) and adjust according to instructions below, and securely tighten bolts:

Clearance between cutting edge and surface:

- *Paved surface*: Insert bolts in lower hole.
- *Uneven or gravel surface:* Insert bolts according to distance needed:
- 1/2" - middle hole
  1" - upper hole

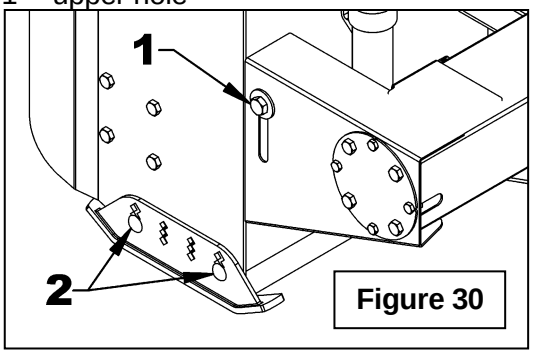

Figure 30

Manual Deflector Adjustment

Set the angle of deflection according to the distance the snow must be thrown. To set the deflector angle, loosen the deflector knobs located on the side of the deflector and adjust the deflector to the appropriate angle. Retighten the knobs.

SNOW REMOVAL METHODS

When removing snow, do not use the snowblower as a dozer blade to push snow. Let the snowblower work its way through deep drifts. If the speed of your tractor is too fast, the snowblower may become overloaded and clog. For best results, raise the snowblower and remove a top layer of snow. A second pass with the snowblower will remove the remaining snow.

IMPORTANT: Use full RPM power when removing wet, sticky snow. Low RPM power will tend to clog the chute.

WARNING

Do not use hands or feet to unclog chute. Do not attempt to clear clogged chute of snow while tractor engine is running. If the chute clogs, disengage the drive shaft, shut off the tractor engine, remove the ignition key, wait for all movement to stop, and then clear the snow from the chute.

A definite pattern of operation is required to thoroughly clean the snow area. These patterns will avoid throwing snow in unwanted places as well as eliminating a second removal of snow

PATTERN 1

DISCHARGE SNOW BOTH SIDES

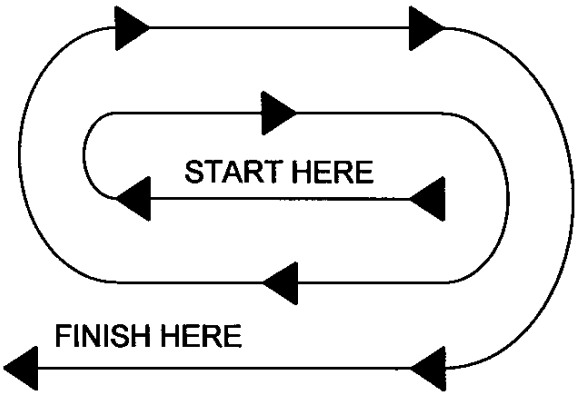

DISCHARGE SNOW BOTH SIDES

Where it is possible to throw the snow to the left and right (above), as on a long driveway, it is advantageous to start in the middle. Plow from one end to the other, throwing snow to both sides without changing the direction of the discharge guide

PATTERN 2

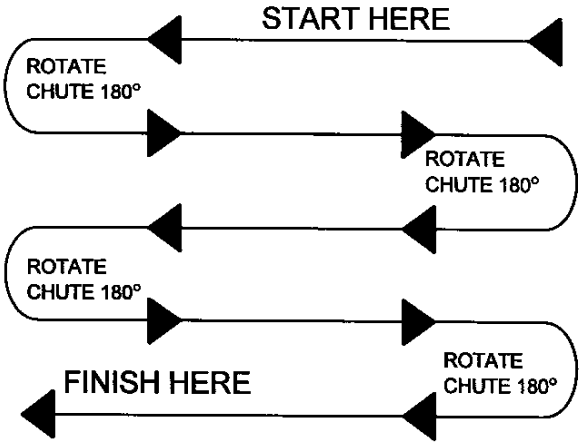

DISCHARGE SNOW THIS SIDE ONLY

If the snow can only be thrown to one side of the driveway or sidewalk (above), start on the opposite side. At the end of the first pass, rotate the discharge guide 180 degrees for the return pass. At the end of each succeeding pass, rotate the discharge guide 180 degrees to maintain direction of throw in the same area.

MAINTENANCE

Shearbolts

Check the shearbolts indicated on the figure below at frequent intervals for proper tightness to be sure the blower is in safe working condition. **Figure 31:** To access the shear bolts, pull up the access pannel (item 1) located near the chain. If the shearbolts need replacement, use the following parts only:

Drive line

B48C:
Shear bolt hex. 1/4"NC x 1 3/4" gr.5 with 1/4"NC nylon ring nut. Part number 663837.

B54C-B64C

Shear bolt hex. 1/4"NC x 1 1/4" gr. 2, including nut and plated lockwasher. Part number 669596.

Drive Shaft

B48C:

Bolt M6 x 1.00 x 40mm lg gr.8.8 PTD and nut. Part Number 4700105

B54C-B64C
Bolt M8 x 1.25 x 50mm lg gr.8.8 and nut. Part Number 4700060

WARNING

Provide adequate blocking before working under the snowblower when in the raised position.

Driveline

IMPORTANT: When the snowblower is not used for more than two weeks, perform driveline maintenance and always store it in a dry place, away from bad weather conditions.

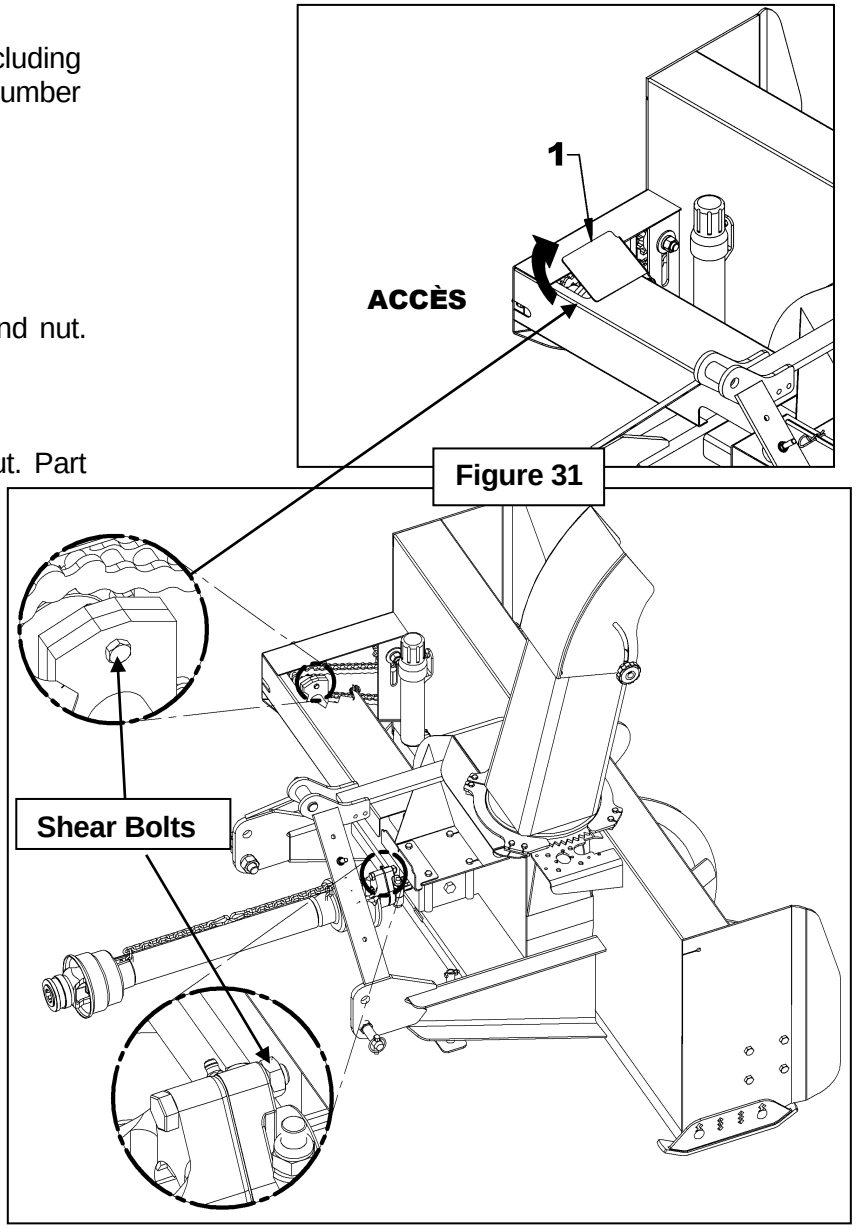

Figure 31

LUBRICATION

Use oil or a grease gun and lubricate as follows:

UseDESCRIPT	INTERVAL	LUBRICATION REQUIRED
Driveline	8 hours	Grease each universal joint. Separate the sliding parts and cover each one of them with grease
	16 hours	Oil the push pins
Chain	4 hours and after each operation	Lubricate with chain lube
Drive Shaft	24 hours of operation	Grease fitting on shear plate
Gearbox	Every month	Check oil level. If needed, add AGMA 5EP extreme pressure oil, SAE 80W90 gear oil or equivalent.
	Once a year	Replace oil
Bearing	24 hours of operation	Grease each auger and drive shaft bearing

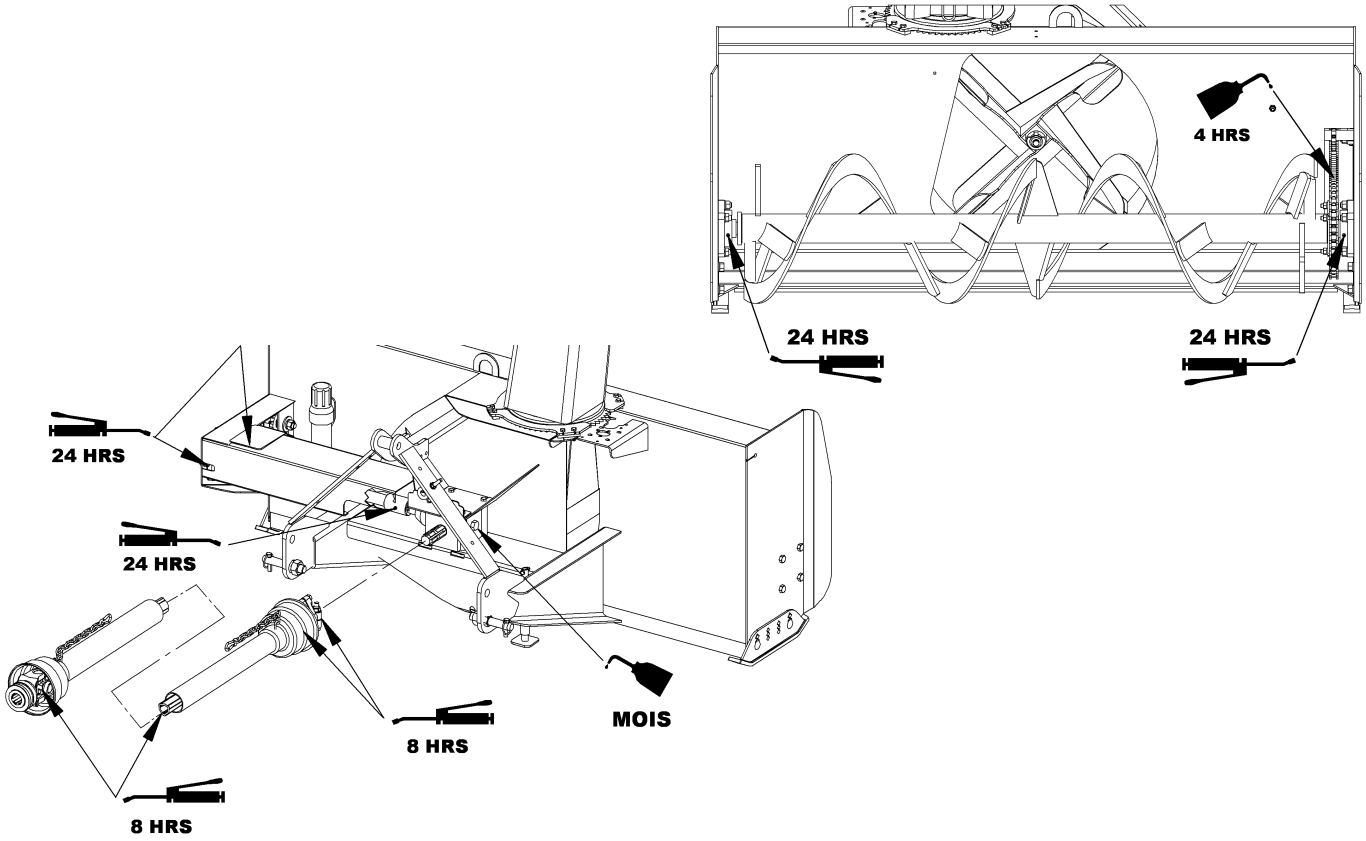

DRIVELINE TROUBLESHOOTING

	AVOIDABLE DAMAGES	POSSIBLE CAUSES	CORRECTIVE ACTIONS
QUICK-DISCONNECT YOKE 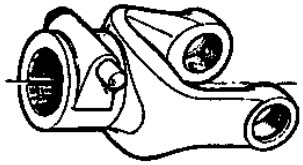	◆ Quick-disconnect pin tight or completely seized. ◆ Quick-disconnect pin damaged (broken or bent) ◆ Quick-disconnect pin damaged in the locking portion. 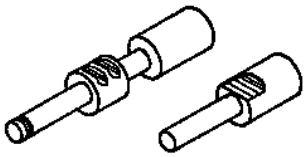	◆ Quick-disconnect pin dirty (insufficient maintenance). ◆ Quick-disconnect pin defective (forced engagement, incorrect handling) ◆ Excessive shaft length. ◆ Axial loads too high.	◆ Clean, oil and follow service instructions. ◆ Replace quick-disconnect pin. ◆ Shorten shaft length (cut both telescopic tubes as well as shield and remove burrs). ◆ Replace quick-disconnect pin. ◆ Clean and grease telescopic tubes, and replace both tubes, if necessary. ◆ Replace quick-disconnect pin.

Note: Quick-disconnect pins must be cleaned and greased every 16 hours.

	AVOIDABLE DAMAGES	POSSIBLE CAUSES	CORRECTIVE ACTIONS
YOKE 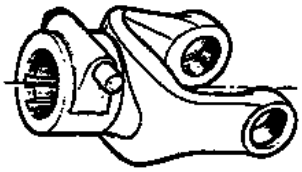	◆ Yoke ears deformation 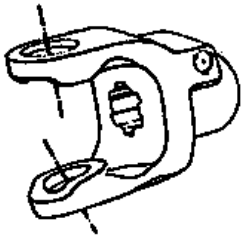 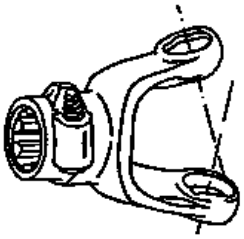	◆ Excessive shaft length. ◆ Axial loads too high. ◆ Excessive working angle and torque.	◆ Shorten shaft length (cut both telescopic tubes as well as shields and remove burrs). ◆ Replace defective yokes. ◆ Clean and grease telescopic tubes, and replace both tubes, if necessary. ◆ Replace defective yokes. ◆ Verify compatibility between shaft and working conditions (torque vs. angle). ◆ Disengage tractor driveline during cornering or when lifting or lowering the implement. ◆ Change to a larger driveline size. ◆ Replace defective yokes.
	◆ Yoke ears distorted. 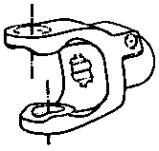	◆ Overload caused by high starting and peak torques.	◆ Engage driveline more carefully. ◆ Use appropriate safety devices. ◆ Replace defective yokes.
	Yoke ears worn or pounded. 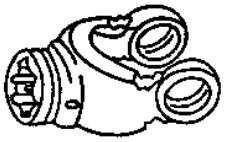	◆ Excessive working angle.	◆ Avoid excessive working angle. ◆ Disengage tractor driveline during cornering. ◆ Replace defective yokes.

	AVOIDABLE DAMAGES	POSSIBLE CAUSES	CORRECTIVE ACTIONS
CROSS KIT 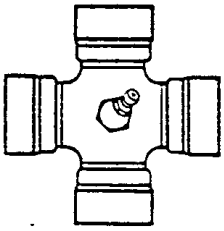	◆ Cross arms broken. 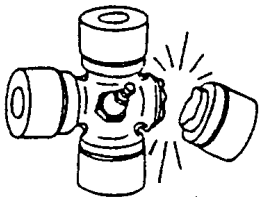	◆ Extreme torque peak or shock load. ◆ Axial loads too high.	◆ Use appropriate safety device. ◆ Change to a larger driveline size. ◆ Shorten driveline shaft. ◆ Replace defective cross bearings.
	◆ Bearing caps turning in their cross journal. ◆ Overheated bearing caps.	◆ Excessive continuous torque and/or excessive working angle. ◆ Inadequate greasing.	◆ Verify compatibility between shaft and working conditions. ◆ Carefully follow greasing instructions. ◆ Replace defective cross bearings.
	◆ Accelerated wear of cross kit. 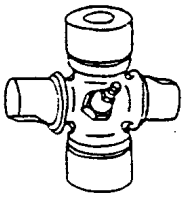	◆ Excessive continuous torque and/or excessive working angle. ◆ Inadequate greasing.	◆ Verify compatibility between shaft and working conditions. ◆ Carefully follow greasing instructions. ◆ Replace defective cross bearings.

Note: Cross bearings must be greased every 8 working hours.

	AVOIDABLE DAMAGES	POSSIBLE CAUSES	CORRECTIVE ACTIONS
TELESCOPIC TUBES 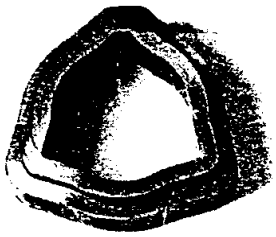	◆ Telescopic tubes failure or twisting. 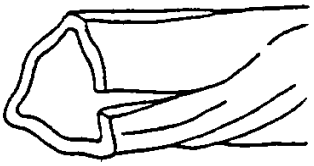	◆ Extreme torque peak or shock load. ◆ Short tube engagement.	◆ Use appropriate safety device. ◆ Change to a larger driveline size. ◆ Replace the driveline drive shaft with one having adequate length. ◆ Replace defective tubes.
	◆ Accelerated wear of telescopic tubes.	◆ Extreme load when sliding. ◆ Short tube engagement. ◆ Inadequate greasing. ◆ Dirt	◆ Change to a driveline with rilsan coated inner tube. ◆ Replace the driveline with one having adequate length. ◆ Carefully follow greasing instructions. ◆ Replace defective tubes.

Note: Telescopic tubes must be cleaned and greased every 8 working hours.

	AVOIDABLE DAMAGES	POSSIBLE CAUSES	CORRECTIVE ACTIONS
SHIELD 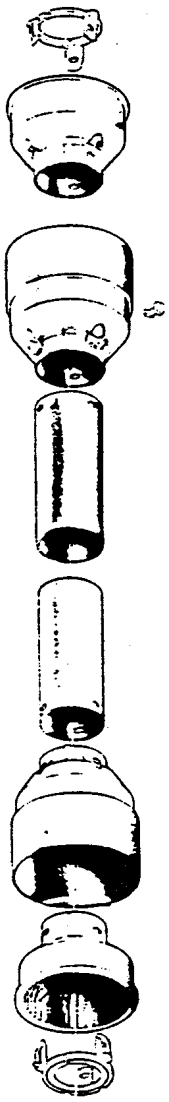	◆ Excessive wear of shield bearings. 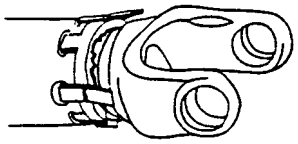	◆ Insufficient lubrication. ◆ Incorrect chain mounting. ◆ Shield interfering with implement.	◆ Follow lubrication instructions. ◆ Mount chain to allow maximum angularity. ◆ Avoid contact of the shields with fixed parts of the machine or tractor. ◆ Replace shield bearings.
	◆ Chain moving or failure. 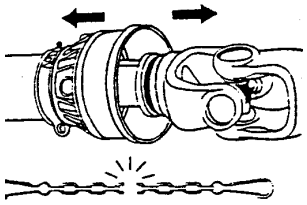	◆ Shield interfering with implement. ◆ Incorrect chain mounting.	◆ Avoid contact of the shields with fixed parts of the machine or tractor. ◆ Mount chain to allow maximum angularity. ◆ Replace defective parts.
	◆ Shield cone damaged. 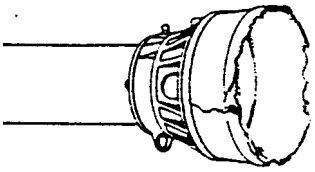	◆ Shield cone in contact with components on the tractor and/or implement. ◆ Excessive angularity.	◆ Eliminate interference between Shield cones and any part on the tractor and/or implement. ◆ Avoid excessive angle during cornering or when lifting or lowering the implement. ◆ Replace damaged Shield cones.
	◆ Shield tubes damaged (deformed and split at one side). 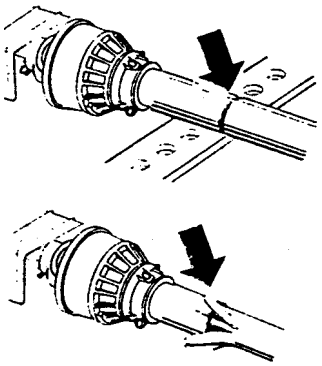	◆ Shields in contact with components on the tractor and/or implement. ◆ Shield tubes overlap too short or no overlap at all with extended driveline.	◆ Eliminate interference between Shield cones and any part on the tractor and/or implement. ◆ Replace damaged tubes. ◆ Adjust Shield tubes length with longer tubes.

Note: Shield bearings must be greased every 8 working hours.

INTRODUCTION

All parts are illustrated in "exploded views" which show the individual parts in their normal relationship to each other. Reference numbers are used in the illustrations. These numbers correspond to those in the "Reference Number" (REF) column, and are followed by the description and quantity required.

Right hand and left hand are determined by those seen by the conductor standing behind the equipment.

The manufacturer reserves the rights to change, modify, or eliminate from time to time, for technical or other reasons, certain or all data, specifications, or the product or products themselves, without any liability or obligation.

The parts listed here are available through your local dealer.

MANUAL HOLDER – ALL MODELS

REF.	DESCRIPTION	QTY	PART #
1	Manual holder	1	4200030
2	Bolt hex. 5/16" NC x 3/4" lg gr. 5, PTD	2	0100018
3	Nylon insert locknut 5/16" NC, PTD	2	1000005

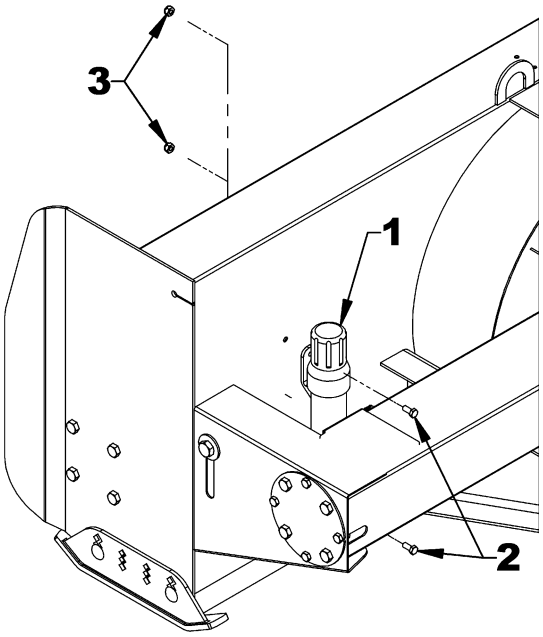

SNOWBLOWER – B48C

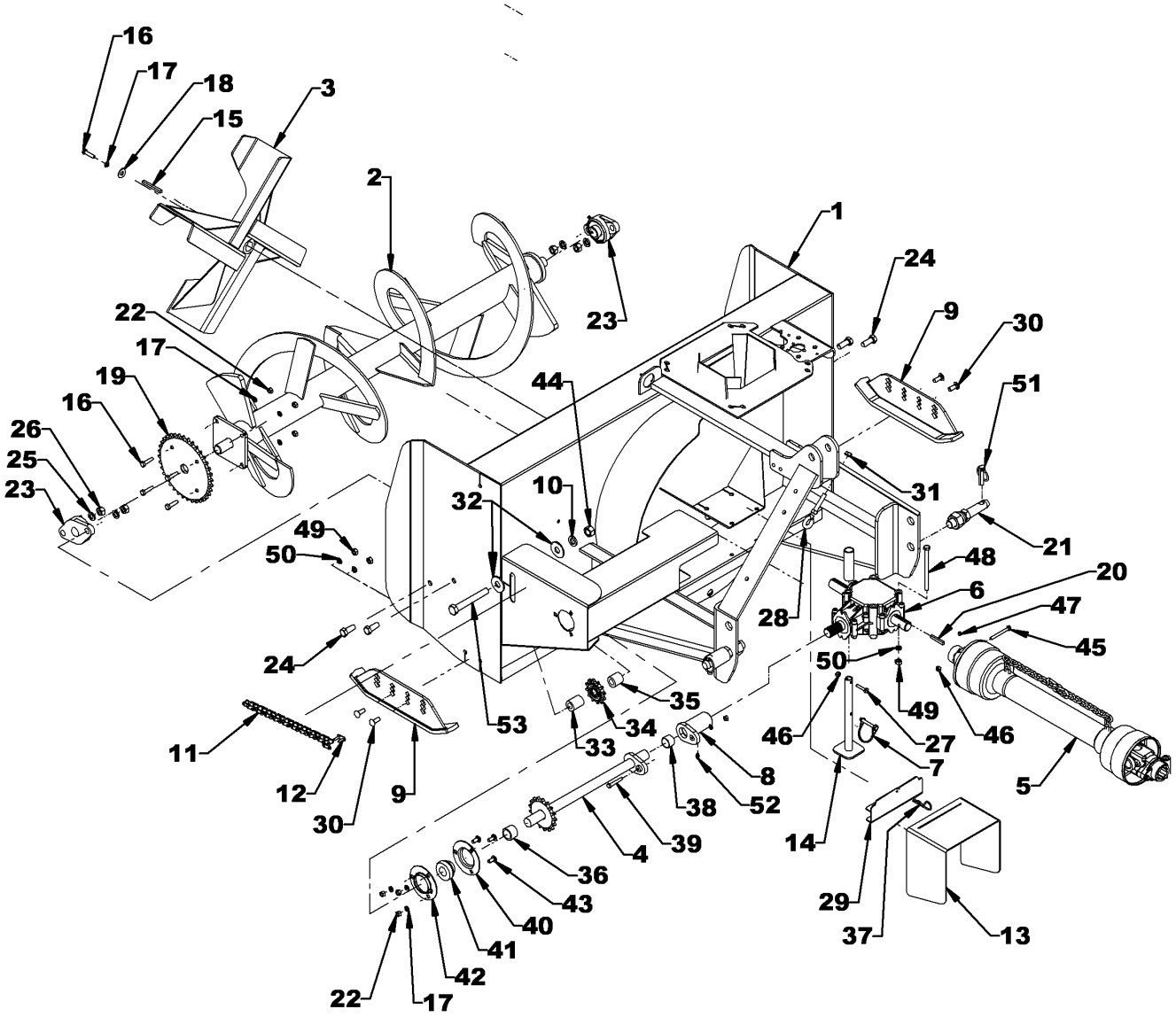

SNOWBLOWER – B48C

REF.	DESCRIPTION	QTY	PART #
1	Housing	1	---
2	Auger	1	667636
3	Fan	1	667637
4	Drive shaft	1	667638
5	Driveline, 20 series	1	4700100
6	Gear box	1	4500039
7	Round wire lockpin 1/4" x 2" PTD	1	1900006
8	Shear plate	1	667639
9	Shiw shoe adjustable	2	669586
10	Lockwasher 5/8" PTD	1	1200007
11	Chain #50 x 84 links incl. connecting link	1	3300016
12	Connecting link #50	1	655837
13	Drive shaft	1	668057
14	Driveline, 20 series	1	668053
15	Key 1/4" x 1/4" x 2 1/2" lg	1	660924
16	Bolt hex. 5/16" NC x 1 1/4" gr.5 PT	5	0100020
17	Lockwasher 5/16" PTD	8	1200003
18	Flat washer 7/16" hole	1	1400004
19	Sprocket #50A36	1	3300014
20	Key 1/4" x 1/4" x 1 3/4" lg	1	659579
21	Hitch pin Cat. 1	2	654196
22	Nut hex. 5/16" NC PTD	7	0900002
23	Bearing Ø1", 2 holes	2	4300025
24	Bolt hex. 1/2" NC x 1 1/4" gr.5 PTD	4	0100069
25	Lockwasher 1/2" PTD	4	1200006
26	Nut hex. 1/2" NC PTD	4	0900006
27	Bolt hex. 1/4" NC x 1 1/4" gr.5 PTD	1	0100005
28	Eyebolt 3/8" NC x 4" lg inc. Nut	1	0400027
29	Driveline shield bracket	1	668052
30	Carriage bolte 3/8" x 1" gr.5 PTD	4	0300008
31	Serrated flange nut 3/8" NC PTD	1	0900035
32	Flat washer 5/8" (hole 11/16" diam.)	2	1400008
33	Spacer ring 1 13/32" lg	1	668111
34	Sprocket #H50A12	1	655426
35	Spacer ring 1 1/8" lg	1	668112
36	Spacer ring 7/8" lg	1	668110
37	Hairpin 3mm x 65 mm lg	1	1800004
38	Oilite bushing	1	4300055
39	Shear bolt 1/4" NC x 1 3/4" gr.5, with Nut PTD	1	663837
40	Flange with grease slot	1	4300030
41	Bearing 1" hole with locking collar, greasable	1	4300038
42	Flange, 3 holes with grease fitting and groove	1	4300031
43	Carriage bolt 5/16" x 3/4" gr.5 PTD	3	0300002
44	Nut hex. 5/8" - 11 NC PTD	1	0900007

SNOWBLOWER – B48C

REF.	DESCRIPTION	QTY	PART #
45	Bolt hex. 1/4" NC x 2 1/2" gr.5 PTD	1	0100012
46	Nylon insert locknut 1/4" NC PTD	2	1000003
47	Allen setscrew 1/4" NC x 3/8" gr.5 black	1	0500005
48	Bolt hex. 3/8" NC x 5" gr.5 PTD	4	0100051
49	Nut hex. 3/8" NC PTD	8	0900003
50	Lockwasher 3/8" PTDE	8	1200004
51	Linchpin 7/16" PTDE	2	1900003
52	Grease fitting 1/4" NF	1	654106
53	Bolt hex. 5/8" NC x 4 1/2" gr.5 PTD	1	0100104

SNOWBLOWER – B54C & B64C

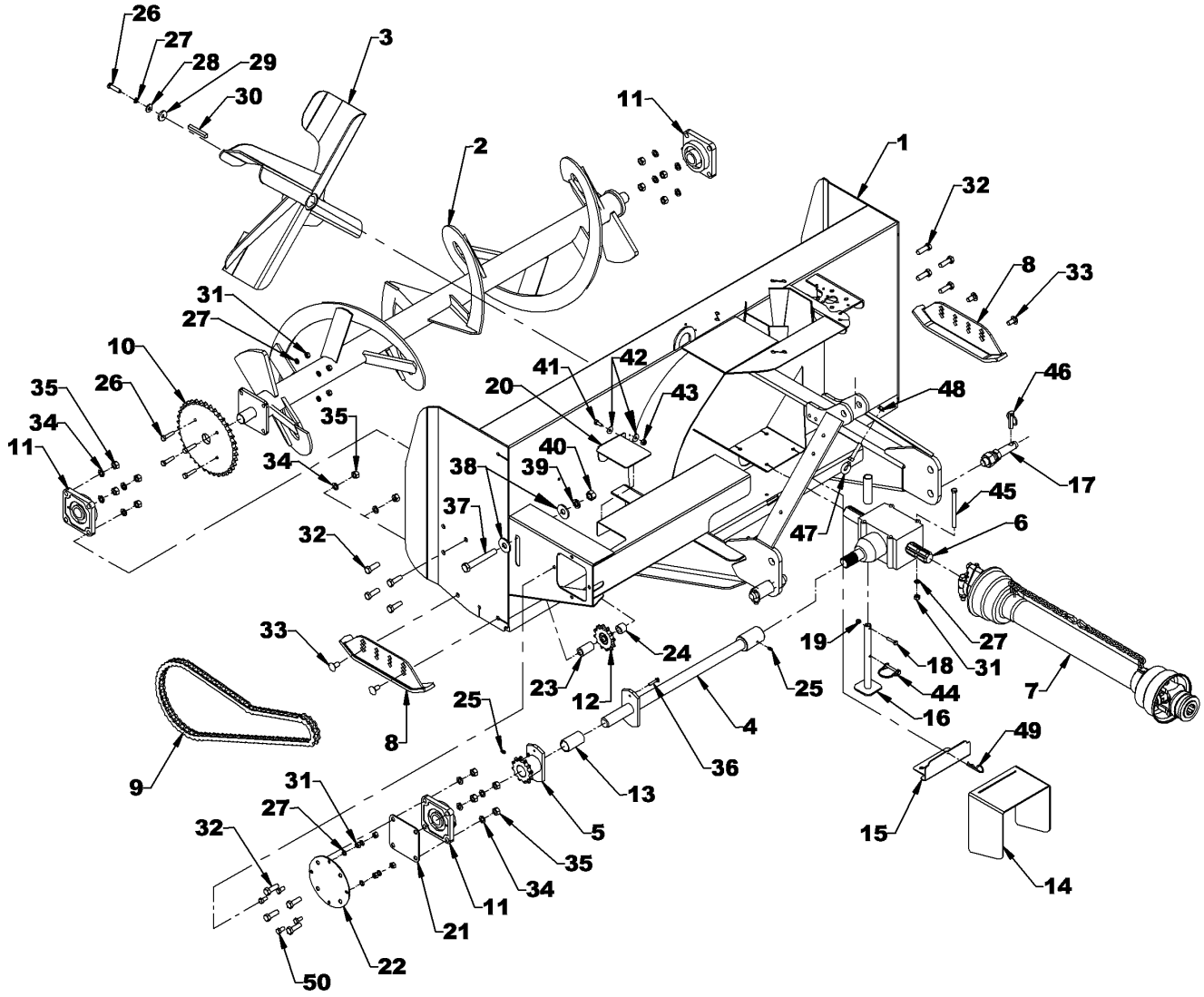

SNOWBLOWER – B54C & B64C

REF.	DESCRIPTION	QTY	B54C	B64C
1	Housing	1	---	---
2	Auger	1	666259	666269
3	Fan	1	668965	668965
4	Driving shaft	1	669578	669719
5	Shear plate	1	669595	669595
6	Gearbox	1	663485	663485
7	Driveline, 40 series	1	4700159	4700159
8	Skid shoes, adjustable	2	669586	669586
9	Chain #60 x 78 links incl. connecting link	1	654009	654009
	- Connecting link #60	1	654839	654839
10	Sprocket #60A38	1	654007	654007
11	Bearing 1 1/4", 4 holes	3	4300118	4300118
12	Sprocket #60A12	1	3300022	3300022
13	Oilite bushing	1	4300072	4300072
14	Driveline shield	1	668057	668057
15	Driveline shield bracket	1	668052	668052
16	Parking Stand	1	668053	668053
17	Hitch pin 7/8" x 5 1/2" lg Cat. 1	2	654196	654196
18	Bolt hex. 1/4" NC x 1 1/4" lg PTD	1	0100005	0100005
19	Nylon insert locknut 1/4" NC PTD	1	1000003	1000003
20	Access plate	1	669597	669597
21	Spacer plate	1	669722	669722
22	Driving shaft support	1	669356	669356
23	Spacer ring 1 3/4" lg	1	668093	668093
24	Spacer ring .656"int. x .807 lg x 1" ext.	1	667777	667777
25	Grease fitting 1/4" NF	2	654106	654106
26	Bolt hex. 3/8"NC x 1 1/2" gr.5 PTD	5	0100040	0100040
27	Lockwasher 3/8" PTD	13	1200004	1200004
28	Flat washer 3/8" (7/16" hole) PTD	1	1400004	1400004
29	Fan washer	1	661554	661554
30	Key 3/8" x 3/8" x 2 3/4" lg	1	654174	654174
31	Nut hex. 3/8" NC PTD	12	0900003	0900003
32	Bolt hex. 1/2"NC x 1 1/2" gr.5 PTD	12	0100070	0100070
33	Carriage bolt 1/2" NC x 1" lg gr. 5 PTD	4	0300022	0300022
34	Lockwasher 1/2" PTD	12	1200006	1200006
35	Nut hex. 1/2" NC PTD	12	0900006	0900006
36	Shear bolt 1/4"NC x 1 1/4" gr.2, incl. Nut	1	669596	669596
37	Bolt hex. 5/8" NC x 4 1/2" gr.5 PTD	1	0100104	0100104
38	Flat washer 5/8" (11/16" dia. trou) PTD	2	1400008	1400008
39	Lockwasher 5/8" PTD	1	1200007	1200007
40	Nut hex. 5/8" -11 NC PTD	1	0900007	0900007
41	Bolt hex. 5/16"NC x 3/4" gr.5 PTD	1	0100018	0100018
42	Nylon flat washer 11/32" hole	2	658467	658467
43	Nylon insert locknut 5/16" NC PTD	1	1000005	1000005
44	Round wire lock pin 1/4" x 2" PTDE	1	1900006	1900006

SNOWBLOWER – B54C & B64C

REF.	DESCRIPTION	QTY	B54C	B64C
45	Bolt hex. 3/8"NC x 5" gr.5 PTD	4	0100051	0100051
46	Linchpin 7/16" PTD	2	1900003	1900003
47	Eyebolt 3/8" NC x 4" lg inc. Nut	1	0400027	0400027
48	Serrated flange nut 3/8" NC PTD	1	0900035	0900035
49	Hairpin 3mm x 65mm lg.	1	1800004	1800004
50	Bolt hex. 3/8" NC x 3/4" lg PTD	4	0100037	0100037

CHUTE

REF.	DESCRIPTION	QTY	PART #
1	Chute assembly, with decals	1	669704
2	Knob 5/16"NC	2	657309
3	Flat washer nylon 11/32" dia.	2	658467
4	Carriage bolt 5/16"NC x 1" gr.5 PTD	2	0300003
5	Flat washer nylon 7/16" dia.	2	658468
6	Hand guard PTD	1	657308
7	Bolt hex. 1/4"NC x 3/4" gr.5 PTD	2	0100003
8	Flat washer 5/16" dia. PTD	2	1400002
9	Lockwasher 1/4" PTD	2	1200002
10	Nut hex. 1/4"NC PTD	2	0900001
11	Rotation bushing	1	659151
12	Spacer for retaining plate 3/8" th	4	665957
13	Side retaining plate	2	669496
14	Middle retaining plate	1	669497
15	Bolt hex. 5/16" NC x 1 1/4", gr.5 PTD	8	0100020
16	Lockwasher 5/16", PTD	8	1200003
17	Nut 5/16" NC, PTD	8	0900002

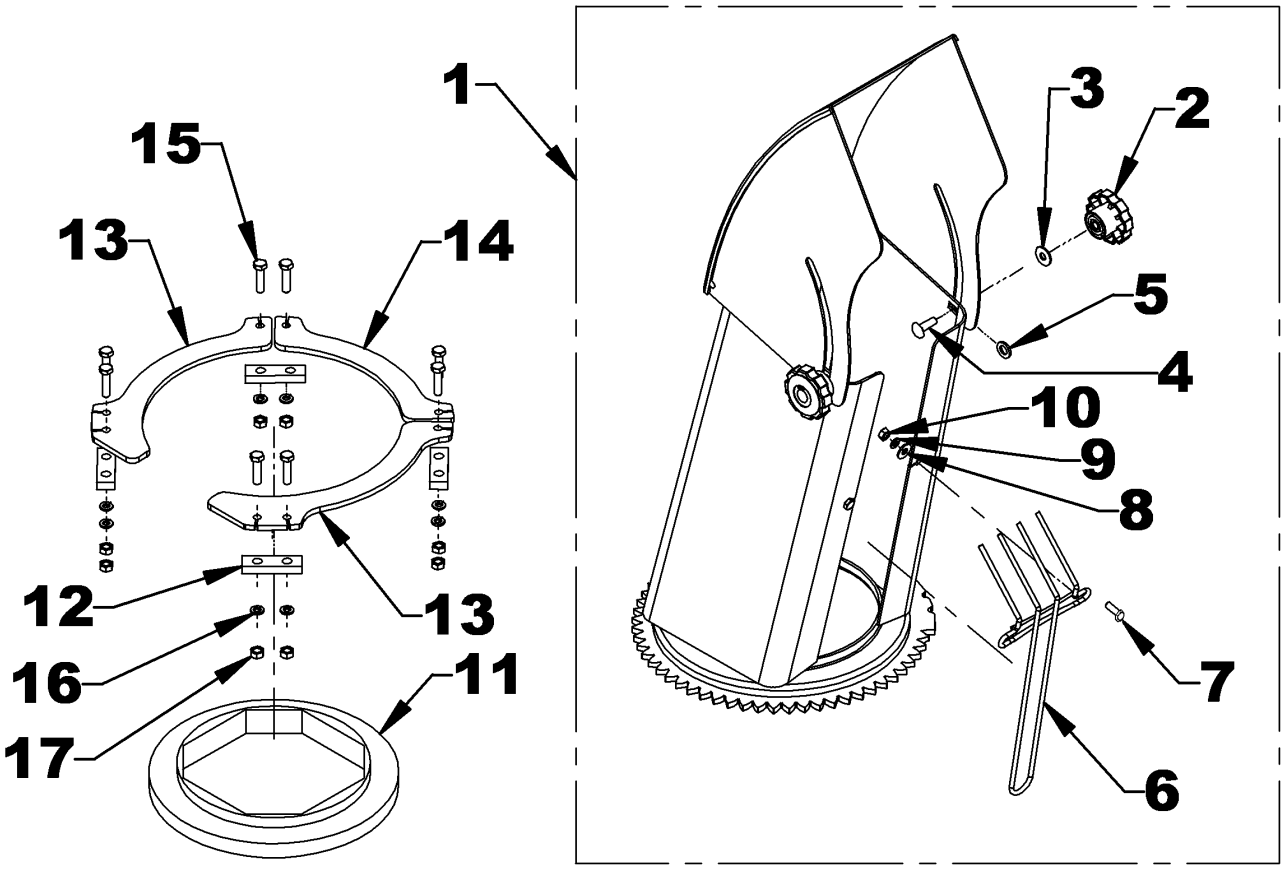

GEARBOX 4500039 FOR B48C

REF	DESCRIPTION	QTY	PART #
1	Casing	2	4500058
2	Bearing	2	4300059
3	Shim	2	661731
4	Input shaft	1	4500059
5	Shim	1	661733
6	Oil seal	3	661730
7	Snap ring	1	661734
8	Gear	1	4500061
9	Key	1	660063
10	Output shaft	1	4500060
11	Bearing	2	4300058
12	Plug	1	661739
13	O-ring	1	661144
14	Allen socket head capscrew M8 x 1.25mm x 45mm – 8.8.	8	0800036
15	Stover Locknut M8 x 1.25 - 8	8	0900063

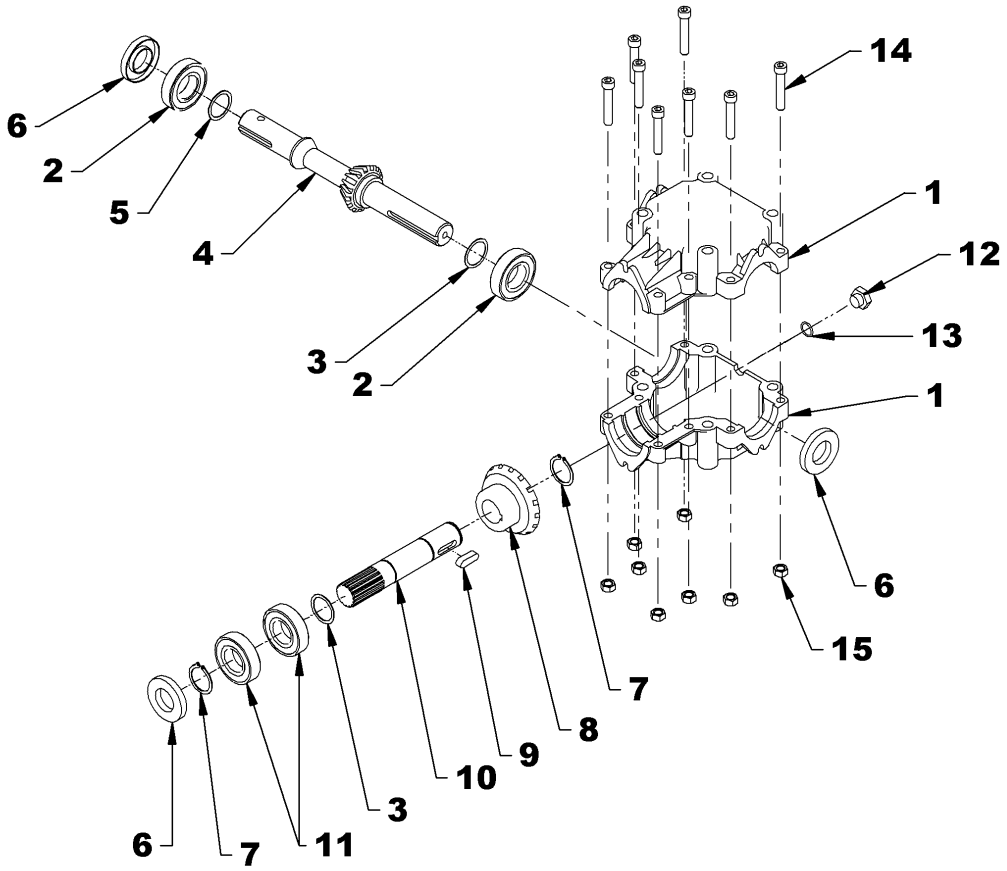

GEARBOX 663485 FOR B54C- B64C

REF	DESCRIPTION	QTY	PART #
1	Casing	2	659848
2	Bearing	2	659844
3	Shim	1	656649
4	Input shaft	1	664663
5	Shim	2	659855
6	Oil seal	3	659852
7	Snap ring	2	656652
8	Gear	2	662236
9	Parallel key	2	659850
10	Output shaft	1	659853
11	Bearing	2	659844
12	Plug	1	659847
13	O-ring	1	661144
14	Allen socket head capscrew M8 x 1.25mm x 55mm – 8.8.	8	0800032
15	Stover locknut M8 x 1.25mm - 8	8	0900063
16	Shim	1	659854

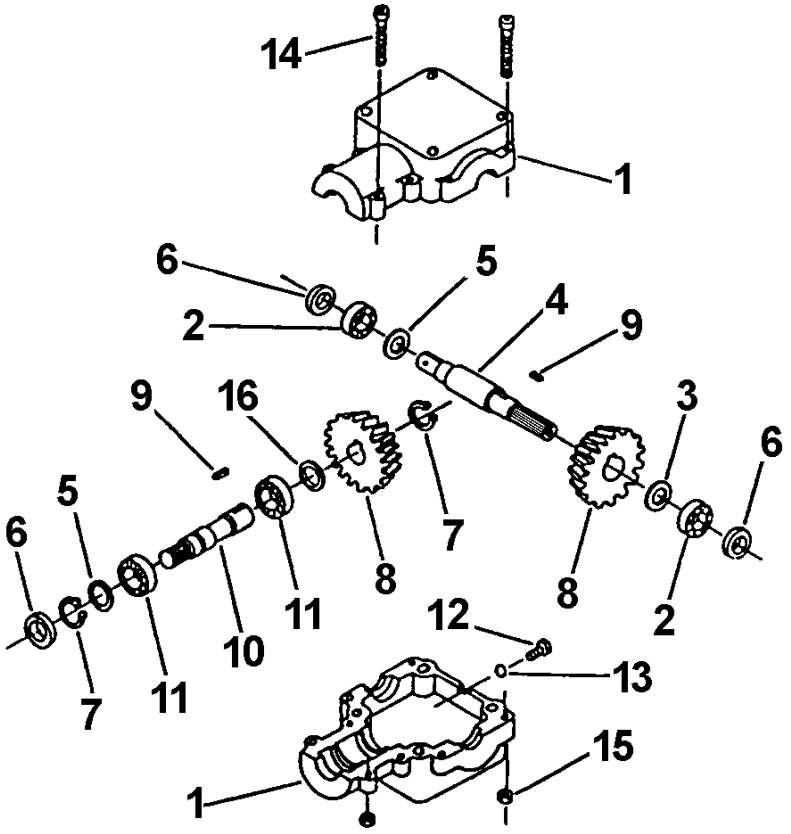

DRIVELINE 4700100 FOR B48C

REF.	DESCRIPTION	QTY	PART #
1	Quick disconnect yoke Ø 1", keyway 1/4"	1	4700113
2	Journal Cross	2	4700107
3	Yoke for male tube	1	4700111
4	Male Shaft	1	4700112
5	Female Shaft	1	4700109
6	Yoke for female tube	1	4700108
7	Yoke Ø1 3/8", 6 splines	1	4700104
8	Push safety pin set	1	663151
9	Shear bolt M6 x 40 mm 8.8 and Nut	1	4700105
10	Ball 7/32"	24	4700106
11	Grease fitting	1	657198
12	Shield and chain	1	4700110
13	Pin for female tube	1	4700062
14	Pin for male tube	1	4700114

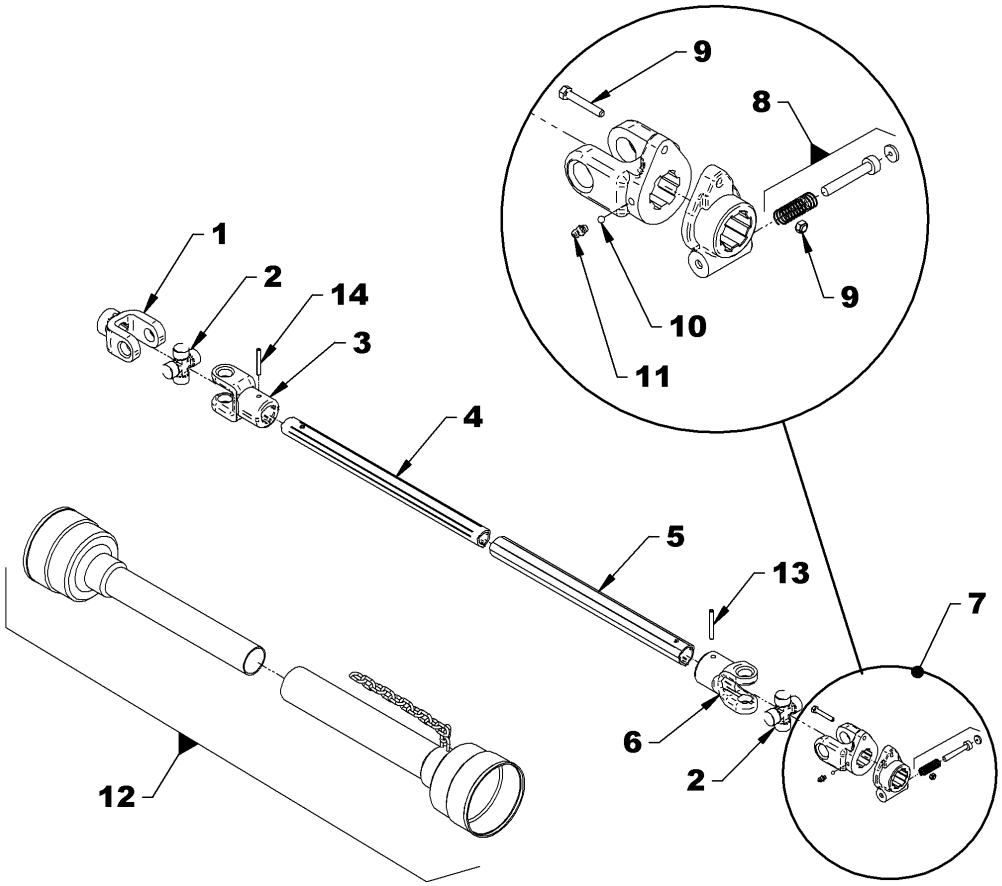

DRIVELINE 4700159 FOR B54C & B64C

REF.	DESCRIPTION	QTY	PART #
1	Yoke ass'y	1	660764
2	Journal cross	2	660765
3	Yoke for female tube	1	663189
4	Female tube	1	4700160
5	Male tube	1	4700161
6	Yoke for male tube	1	663193
7	Yoke ass'y	1	4700058
8	Bolt M12 x 1.25 x 70 with nut	2	662199
9	Grease fitting	1	663129
10	Ball Ø1/4"	23	663163
11	Shear bolt 8mm x 1.25 x 50 gr.8.8 and nut	1	4700060
12	Protector and chain	1	4700164
13	Pin for outer tube	1	4700061
14	Pin for inner tube	1	4700062

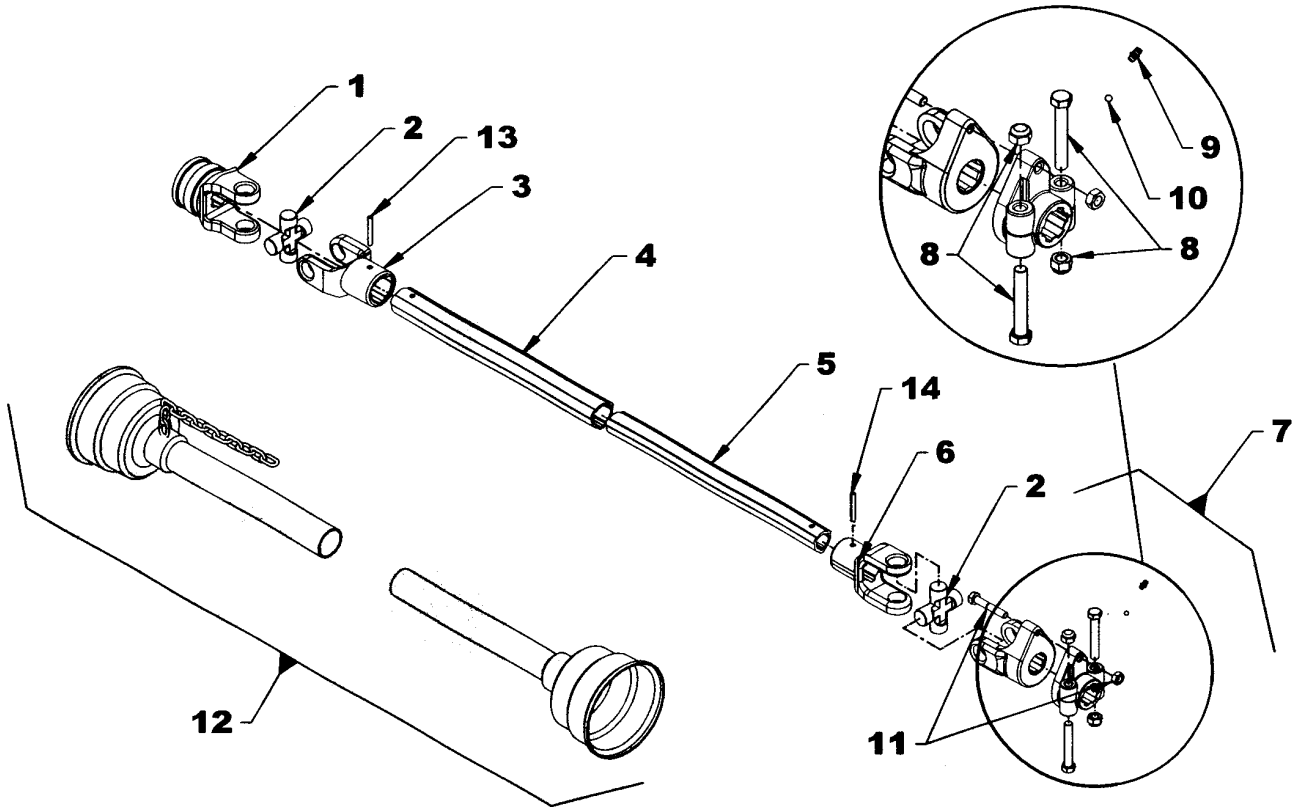

BER0077 – MANUAL ROTATION

REF.	DESCRIPTION	QTY	PART #
1	Rotation handle	1	667425
2	Rotation tube	1	660188
3	Rotation yoke	1	659595
4	Universal block	1	658193
5	Rotation worm	1	665953
6	Rotation worm support	1	665952
7	Spring pin 1/4" x 1 1/4"	2	1600015
8	Hairpin 4mm x 80mm, PTD	1	1800002
9	Plastic handle	1	656797
10	Bushing 1 5/16" lg	2	657335
11	Hex. nut 1/4"NC, PTD	3	0900058
12	Allen socket head capscrew 10-24NC x 1" gr. 5	1	0800009
13	Nylon insert locknut 10-24 NC, PTD	1	1000002
14	Handle support	1	660187
15	Handle support bracket	1	660269
16	Hex. bolt 3/8"NC x 1 1/4" gr. 5, PTD	2	0100039
17	Hex. nut 3/8"NC PTD	2	0900003
18	Lockwasher 3/8", PTD	2	1200004
19	Setscrew 3/8"NC x 1/2", square head	1	0600006
20	Plastic Grommet	1	657390
21	Bracket	1	660388
22	Hex. bolt 3/4"NC x 1 1/2" gr. 5, PTD	1	0100115
23	Lockwasher 3/4", PTD	1	1200008
24	Hex. nut 3/4"NC, PTD	1	0900008
25	Rotation tube support	1	665951
26	Hex. bolt 1/4"NC x 3/4" gr. 5, PTD	3	0100003
27	Lockwasher 1/4", PTD	3	1200002
	For the Chute Installation		
28	Spacer for retaining plate 1/16" th	4	666191

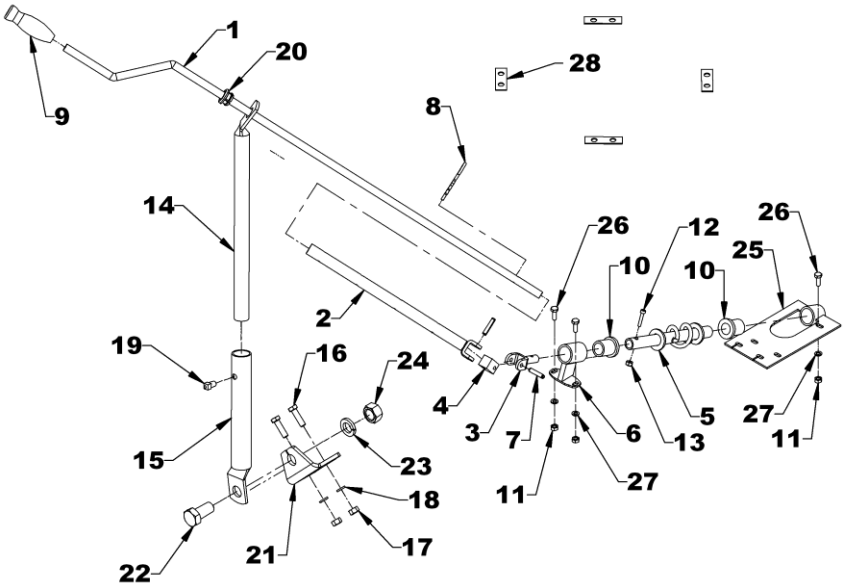

BER0078 - HYDRAULIC ROTATION

REF.	DESCRIPTION	QTY	PART #
1	Hydraulic motor 50cc	1	3910092
	- Seal Kit	1	3910093
2	- Key 1/4" x 1" woodruff (incl. in 3910092)	1	659191
3	Motor gear	1	669705
4	Flow restrictor 0.052"	2	664362
5	Hose clamp	1	666583
6	Bolt hex. 3/8"NC x 1 1/2" PTD	1	0100040
7	Nylon insert locknut 3/8" NC PTD	1	1000006
8	Nylon tie wrap 1/4" x 13.8" lg.	2	2100009
9	Flat washer 1/4" (5/16" hole) PTD	1	1400002
10	Lockwasher 1/4" PTD	3	1200002
11	Gear shield	1	669715
12	Bolt hex. 1/4"NC x 3/4" PTD	3	0100003
13	Bolt hex. 3/8"NC x 1" PTD	4	0100038
14	Lockwasher 3/8" PTD	4	1200004
15	Flat washer 3/8" (7/16" hole) PTD	4	1400004
16	Motor spacer	1	669718
17	Nut hex. 1/4"NC PTD	2	0900001

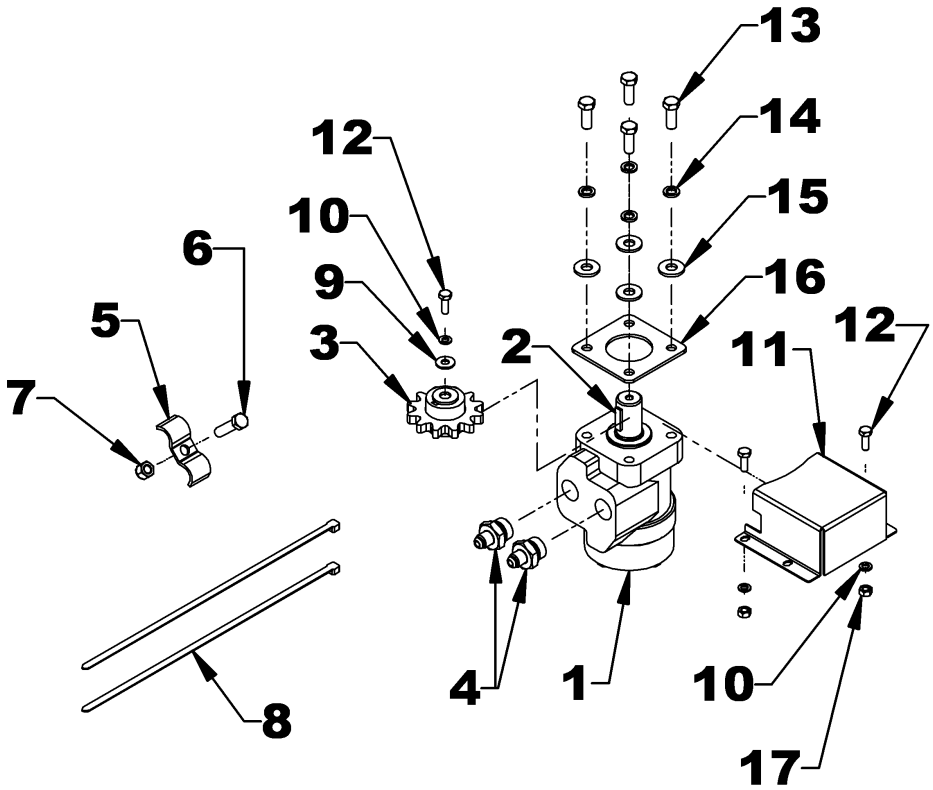

BER0079A - HYDRAULIC DEFLECTOR

REF.	DESCRIPTION	QTY	PART #
1	Allen socket head capscrews 1/4" x 3/4" PTD	8	0800050
2	Lockwasher 1/4" PTD	8	1200002
3	Nut hex 1/4" NC PTD	8	0900001
4	Carriage bolt 5/16" NC x 3/4" Gr.5 PTD	2	0300002
5	Elbow 90° 3/8" NPT STM x 1/4" NPT SWF	2	654438
6	Deflector bracket	1	669979
7	Deflector base bracket	1	669980
8	Cylinder & pins ass'y	1	665433
	- Seal kit	1	665434
9	- Cotter pin 3/16" x 1 1/2" PTD	4	1500013
10	- Pin 3/4" x 2 1/2" PTD	2	665235
11	Hose support	1	669031
12	Hose clamp	1	666583
13	Bolt hex. 3/8" NC x 1 1/2" PTD	3	0100040
14	Nylon insert locknut 3/8" NC PTD	3	1000006
15	Nylon insert locknut 5/16"NC PTD	2	1000005
16	Nylon tie wrap1/4" x 15" lg.	2	2100009

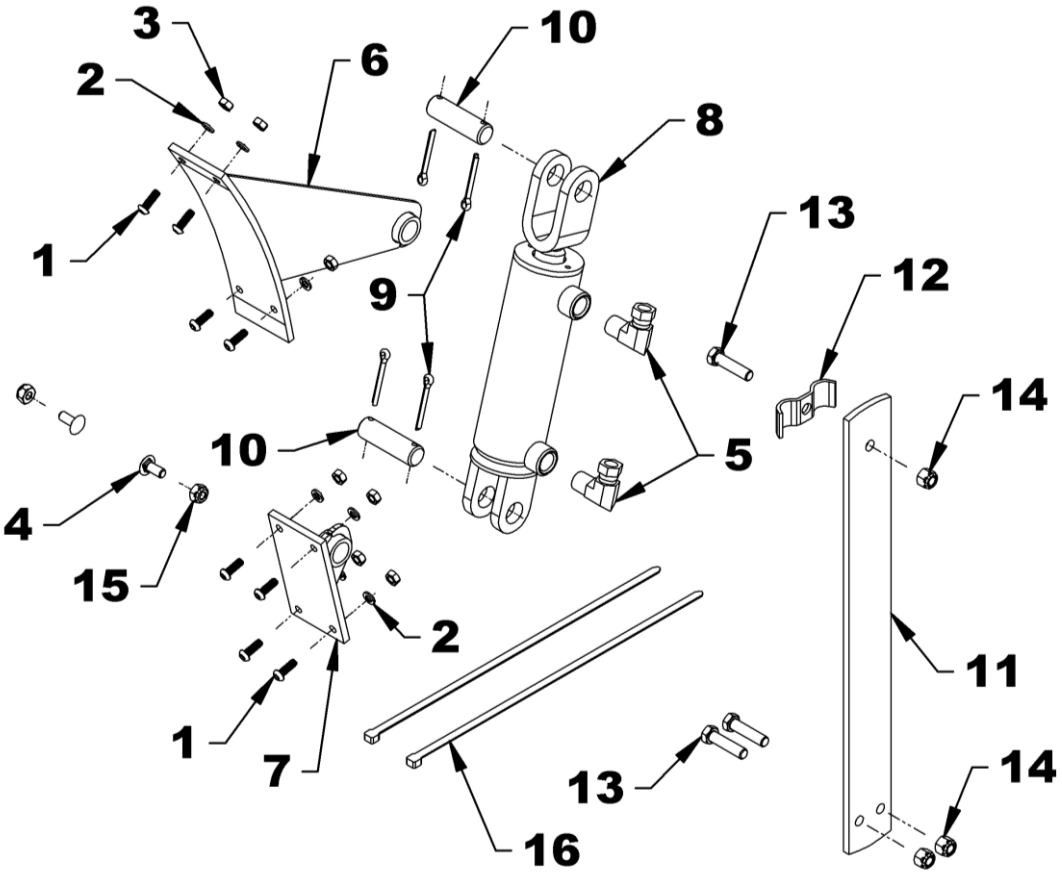

BER0080- ELECTRIC DEFLECTOR

REF.	DESCRIPTION	QTY	PART #
1	Actuator	1	667714
1A	Male terminal	2	663282
1B	Male connector 2 cavities D-A	1	663280
2	Bolt hex. 3/8” NC X 1 1/2” PTD	4	0100040
3	Flat washer 5/16" (3/8” hole) PTD	2	1400003
4	Nut nylon insert 3/8”NC PTD	4	1000006
5	Deflector bracket	1	667750
6	Allen flat head set screw 5/16" NC x 3/4" lg. GR5 PTD	8	0700003
7	Nut serrated flange 5/16”NC PTD	8	0900036
8	Base bracket	1	667749
9	Nylon tie wrap 8" lg, 4.8mm, black	12	2100003
10	Nut nylon insert 5/16”NC PTD	2	1000005
11	Switchbox	1	667557
12	Switchbox clamp	1	667558
13	Bolt hex. 1/4” NC x 1” PTD	2	0100004
14	Lockwasher 1/4” PTD	2	1200002
15	Wire 14GA x 72” lg. ass. black - Negative power supply	1	4000096
16	Wire 14GA x 72” lg. & Fuse ass. black - Positive power supply	1	4000098
17	Harness 14GA x 144” lg. - Actuator power supply	1	4000097
18	Wire 14GA x 3” lg. Ass. yellow	2	667713
19	Loom 260" lg	1	669315
20	Round terminal 6-8 wire 10-12GA	2	4000043
21	Hose support	1	669031
22	Tap connector	1	656665
23	Fuse 5 amp. ATO	1	4000060
24	Rubber cap	1	658666
25	Switch	1	658778

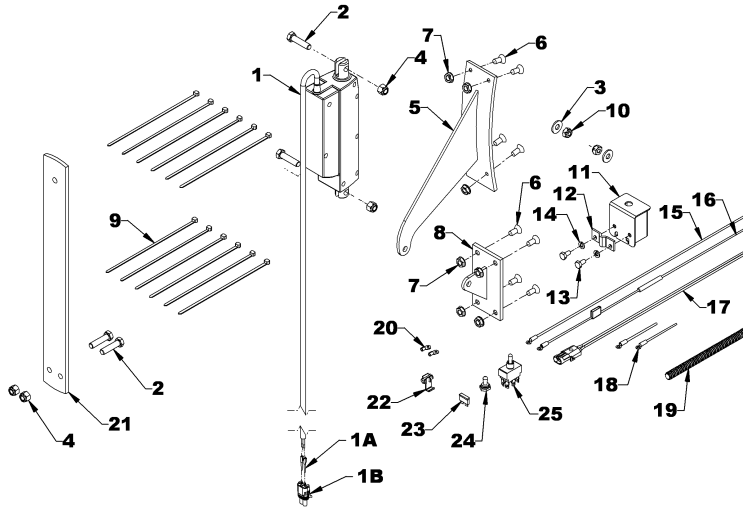

WARRANTY

RADTECH warrants to the original buyer that the equipment is free from defects in material and workmanship. RADTECH's obligation, under this warranty, will be limited to the repair or replacement of any non-wear part or component, which RADTECH finds to be defective within **one year** from the date of original purchase (unless otherwise-specified). The applicable warranty period for commercial or rental use shall be ninety (90) days from the date of purchase

In no event shall RADTECH be liable for consequential, special, direct or indirect damages incurred by the buyer/user.

All components not manufactured by RADTECH (such as motors, actuators, hydraulic components, tires, ...etc.) are covered by the original manufacturer's warranty in conjunction with RADTECH

RADTECH's obligation under this warranty shall be limited to repairing or replacing, free of charge to the original purchaser, any part that, in RADTECH's judgment, shall show evidence of such defect, provided the **distributor** returns the part prepaid within thirty (30) days from date of failure.

This warranty shall not be interpreted to render RADTECH liable for injuries or damages of any kind or nature to person or property. This warranty does not extend to losses because of delays, or to any expenses or losses incurred for labor, substitute machinery, rental or for any other reason.

Except as set forth above, RADTECH shall have no obligation or liability of any kind on account of any of its equipment and shall not be liable for special or consequential damages. RADTECH makes no other warranty, expressed or implied, and specifically, RADTECH disclaims any implied warranty or merchantability or fitness for a particular purpose**. Some states or provinces do not permit limitations or exclusions of implied warranties or incidental or consequential damages, so the limitations or exclusions in this warranty may not apply.**

This warranty is subject to any existing conditions of supply, which may directly affect our ability to obtain materials or manufacture replacement parts. RADTECH reserves the right to make improvements in design or changes in specifications at any time, without incurring any obligation to owners of units previously sold.

No one is authorized to alter, modify or enlarge this warranty nor the exclusions, limitations and reservations.

2835 Chemin de l'Aéroport, Thetford Mines (Québec) G6G 5R7

T +1 418 338-4499 - F +1 418 338-2522

info@radtech.ca
radtech.ca

TORQUE SPECIFICATION TABLE

GENERAL SPECIFICATION TABLE

USE THE FOLLOWING TORQUES WHEN SPECIAL TORQUES ARE NOT GIVEN

Note: These values apply to fasteners as received from supplier dry, or when lubricated with normal engine oil. They do not apply if special graphited or moly sidulphide greases or other extreme pressure lubricants are used. These values apply to dry conditions; under lubricated conditions reduce by 25% the torques in this table.

BOLT HEAD IDENTIFICATION

INCHES Bolt Size	Grade 2		Grade 5		Grade 8	
in-tpi [1]	**N-m [2]**	**lbs-ft [3]**	**N-m**	**lbs-ft**	**N-m**	**lbs-ft**
1/4" – 20NC	7.4	5.6	11	8	16	12
1/4" – 28NF	8.5	6	13	10	18	14
5/16" – 18NC	15	11	24	17	33	25
5/16" – 24NF	17	13	26	19	37	27
3/8" – 16NC	27	20	42	31	59	44
3/8" – 24NF	31	22	47	35	67	49
7/16" – 14NC	43	32	67	49	95	70
7/16" – 20NF	49	36	75	55	105	78
1/2" – 13NC	66	49	105	76	145	105
1/2" – 20NF	75	55	115	85	165	120
9/16" – 12NC	95	70	150	110	210	155
9/16" – 18NF	105	79	165	120	235	170
5/8" – 11NC	130	97	205	150	285	210
5/8" – 18NF	150	110	230	170	325	240
3/4" – 10NC	235	170	360	265	510	375
3/4" – 16NF	260	190	405	295	570	420
7/8" – 9NC	225	165	585	430	820	605
7/8" – 14NF	250	185	640	475	905	670
1" – 8NC	340	250	875	645	1230	910
1" – 12NF	370	275	955	705	1350	995
1 1/8" – 7NC	480	355	1080	795	1750	1290
1 1/8" – 12NF	540	395	1210	890	1960	1440
1 1/4" – 7NC	680	500	1520	1120	2460	1820
1 1/4" – 12NF	750	555	1680	1240	2730	2010
1 3/8" – 6NC	890	655	1990	1470	3230	2380
1 3/8" – 12NF	1010	745	2270	1670	3680	2710
1 1/2" – 6NC	1180	870	2640	1950	4290	3160
1 1/2" – 12NF	1330	980	2970	2190	4820	3560

METRIC Bolt Size	5.8 Class 5.8		8.8 Class 8.8		NP 10.9 Class 10.9	
mm$_x$pitch [4]	**N-m**	**lbs-ft**	**N-m**	**lbs-ft**	**N-m**	**lbs-ft**
M 5 X 0.8	4	3	6	5	9	7
M 6 X 1	7	5	11	8	15	11
M 8 X 1.25	17	12	26	19	36	27
M 8 X 1	18	13	28	21	39	29
M10 X 1.5	33	24	52	39	72	53
M10 X 0.75	39	29	61	45	85	62
M12 X 1.75	58	42	91	67	125	93
M12 X 1.5	60	44	95	70	130	97
M12 X 1	90	66	105	77	145	105
M14 X 2	92	68	145	105	200	150
M14 X 1.5	99	73	155	115	215	160
M16 X 2	145	105	225	165	315	230
M16 X 1.5	155	115	240	180	335	245
M18 X 2.5	195	145	310	230	405	300
M18 X 1.5	220	165	350	260	485	355
M20 X 2.5	280	205	440	325	610	450
M20 X 1.5	310	230	650	480	900	665
M24 X 3	480	355	760	560	1050	780
M24 X 2	525	390	830	610	1150	845
M30 X 3.5	960	705	1510	1120	2100	1550
M30 X 2	1060	785	1680	1240	2320	1710
M36 X 3.5	1730	1270	2650	1950	3660	2700
M36 X 2	1880	1380	2960	2190	4100	3220

[1] in-tpi = nominal thread diameter in inches-threads per inch

[2] N-m = newton-meters

[3] lbs-ft= pounds-foot

[4] mm x pitch = nominal thread diameter in millimeters x thread Pitch

*Torque tolerance +0%, -15% of torquing values. Unless otherwise specified use torque values listed above

***NOTE**: 1 lbs-ft = 12 lbs-in

Manufactured by:

Dalkotech Group

RAD Technologies Inc.
2835, Chemin de l'Aéroport
Thetford Mines, Québec, Canada, G6G 5R7

T +1 418 338-4499 - F +1 418 338-2522

info@radtech.ca
radtech.ca

Printed in Canada